CITY OF BURTON

BURTON PLANNING COMMISSION MEETING

APRIL 12, 2016

MINUTES

Council Chambers | **Regular Meeting** | **5:00 PM**

4303 S. CENTER ROAD
BURTON, MI 48519

This meeting was opened by Chairman Deb Walton at 5:00 PM.

A. PLEDGE OF ALLEGIANCE

B. ROLL CALL

Attendee Name	Title	Status	Arrived
Ellen Ellenburg	Councilwoman	Present	
Kevin Burge	Commissioner	Present	
Mary Ann White	Commissioner	Excused	
Robert Johnson	Commissioner	Present	
Tom Gorang	Commissioner	Present	
Deb Walton	Chairman	Present	
John Benthall	Commissioner	Present	

1. Mr. Walls Resignation

   Mrs. Abbey announced that Mr. Walls has resigned from the Planning Board as of April 5, 2016. Mrs. Walton will take his place as Chairperson until December when we have an election. At next month's meeting, when we have a new appointee, we will vote for a new Vice-Chair.

C. STAFF PRESENT

Amber Abbey, Planning/Zoning
Racheal Boggs, Clerk's Office

D. APPROVAL OF MINUTES

1. Planning Commission - Regular Meeting - Mar 15, 2016 5:00 PM

RESULT:	**ACCEPTED [UNANIMOUS]**
MOVER:	Robert Johnson, Commissioner
SECONDER:	Ellen Ellenburg, Councilwoman
AYES:	Ellenburg, Burge, Johnson, Gorang, Walton, Benthall
EXCUSED:	White

E. SPECIAL USE

1. SPR #16-16

By: South Flint Tabernacle
P.O. Box 7008
Flint, MI 48507

Re: 1291 E. Maple Ave. Burton, MI 48529
59-31-400-103, R-1C / HRM Zoned

For: Special use to construct a new building for a church in R-1C and HRM zones

2. Motion to Approve Special use to construct a new building for a church in R-1C and HRM zones.

RESULT:	**CARRIED [UNANIMOUS]**
MOVER:	Kevin Burge, Commissioner
SECONDER:	Ellen Ellenburg, Councilwoman
AYES:	Ellenburg, Burge, Johnson, Gorang, Walton, Benthall
EXCUSED:	White

F. SITE PLAN REVIEW

1. SPR #16-17

By: South Flint Tabernacle
P.O. Box 7008
Flint, MI 48507

Re: 1291 E. Maple Ave Burton, MI 48529
59-31-400-103

For: Construction of a New Church Facility

Lisa Easterwood stated there are currently several buildings on the site that are used for church functions including an auditorium, classrooms, daycare and a ball field. The proposed area for the new building is about 7 acres of lawn area. The proposed building is 69,000 square feet. There will be a vehicle parking area as well as bus parking. As far as utilities, there are two water main lines on the North side of Maple Avenue, a storm sewer that collects storm water from Maple Avenue, sanitary water and County storm drain that runs through Friel Street. There are no wetlands or flood plains on the site. There is a strip of wooded area that is about 200 feet wide at the North of the property. The building sits back more than 200 feet from the right of way. The main parking area is in the back of the site and will accommodate 345 spaces and will be made of asphalt. The building height is 51.7 feet in the front and 29.4 feet in the back, There will be a trash enclosure on the North end of the parking lot next to the maintenance building. There are two water main lines on the North side of Maple Avenue, we are proposing a 6 inch water service to the back of the building on the East side that will be fire suppression and domestic line. We are installing a fire hydrant per the Fire Chief's recommendation. The design of the storm system will be per Genesee County Drain Commission standards. Lighting will be

LED fixtures, landscaping will be a mixture of trees, shrubs and ornamental grasses. There will be an underground irrigation system. Bus parking will be fenced and gated for security purposes.

Mr. Benthall suggested they contact the FAA in regards to the height of the steeple to make sure it is within their guidelines.

Mrs. Ellenburg asked if Mr. Wallace's concerns were addressed.

Mr. Wallace stated his concern is the time frame because of transients in the area. He feels the fence needs to be replaced immediately.

Mr. Gorang asked if it is possible to put up a temporary fence until construction of the permanent fence can be completed.

Mrs. Abbey suggested putting the fence back behind the residential house to replace what was removed as soon as possible. She thinks this is reasonable for everyone. She would also like to add a contingency that the 6 foot vinyl fence extends from the North property line of the residential home to the tree line within 45 days. Also, no construction traffic should come down Greenly Street. There is no ordinance regarding steeple height however it should be approved through the FAA prior to construction.

Mr. Gorang asked what the plans are for the current building.

Melissa Hudson of Swartz Creek stated she is the Business Manager for the Church and they intend to sell the current church building.

Mr. Burge asked if it is necessary for the city to put up no construction traffic signs.

Mrs. Abbey stated adding it as a contingency to the site plan that will make it enforceable on a violation type basis.

Mr. Burge would like a tree line on the East near the bus parking lot and light deflectors on parking lot lighting as to not disrupt the neighboring residential property.

Jim Hines of Church Builders stated these particular lights will shine straight down and not shed light onto the residential property.

Mrs. Ellenburg asked what the time frame for completion will be.

Mr. Jim Hines stated it will take about 8 weeks for prep, the outside will take 6-8 months and the interior will be completed in about one year.

2. Motion to Approve contruction of a new church facility with the contingency of the following:6 foot vinyl fence to extend from the north property line of the residential home to the tree line and be completed within 45 days , no construction vehicle traffic on Greenly Street, and steeple height to be approved through FAA prior to construction.

RESULT:	**CARRIED [UNANIMOUS]**
MOVER:	Robert Johnson, Commissioner
SECONDER:	Tom Gorang, Commissioner
AYES:	Ellenburg, Burge, Johnson, Gorang, Walton, Benthall
EXCUSED:	White

G. ADMINISTRATIVE SITE PLAN REVIEW

1. SPR #16-14

   By: John Chams
   48 Birchmount Walk
   London, On

   Re: 3211 S. Dort Hwy Burton, MI 48529

   For: Used Vehicle Sales

2. SPR #16-15

   By: Riad Osman
   817 Byron Hills Drive
   London, On

   Re: 3201 S. Dort Hwy. Burton, MI 48529

   For: Office Space

3. SPR #16-18

   By: Commercial Graphics of MI Inc.
   1453 Walli Strasse
   Burton, MI 48509

   Re: 1453 Walli Strasse Burton, MI 48509

   For: Printing Company

4. SPR #16-19

   By: Big Coop's Trucking, LLC.
   3066 Misty Creek
   Swartz Creek, MI 48473

Re: 3481 S. Dort Hwy. Burton, MI 48529

For: Trucking Company

5. SPR #16-20

By: Gregory Butler
1911 Miles Rd.
Lapeer, MI 48446

Re: 4355 S. Saginaw St. Burton, MI 48529

For: Retail / Storage

6. SPR #16-21

By: Allen Automotive
2447 Judd Rd.
Burton, MI 48529

Re: 2447 Judd Rd. Burton, MI 48529

For: Used Vehicles Sales

H. AUDIENCE PARTICIPATION

None.

I. BOARD DISCUSSION

Mrs. Abbey provided an update on the master plan. The contract is signed and Mr. Piggot is working on the Facebook page and website. If there are questions, I can forward them to him. He will have an update at our next meeting.

Mr. Gorang asked if the board can have Mr. Piggot's information prior to the meeting.

Mrs. Abbey stated it will be in your meeting agenda packet.

Mr. Gorang would like to thank Mr. Walls for his service to the Planning Commission for the past several years. He has done a great job and will be missed.

Ms. Boggs gave the board members information regarding a free Emerging Issues seminar at the Rowe Building on May 4th from 7:00 PM to 9:00 PM. Anyone interested in attending may register or call the Clerk's office.

Mrs. Abbey stated Mr. Slattery would like to have a Robert's Rules of Order class for the Planning Commission. It would take about an hour and we could hold it before a meeting. I will set it up with Mr. Slattery and let everyone know.

The next regularly scheduled meeting will be held on Tuesday, May 10, 2016 at 5:00 p.m.

Meeting was adjourned at 6:05 PM.

CITY OF BURTON

BURTON PLANNING COMMISSION MEETING

MARCH 15, 2016

MINUTES

Council Chambers | **Regular Meeting** | **5:00 PM**

4303 S. CENTER ROAD
BURTON, MI 48519

This meeting was opened by Chairman Robert Walls at 5:00 PM.

A. PLEDGE OF ALLEGIANCE

B. ROLL CALL

Attendee Name	Title	Status	Arrived
Greg Kray	Alternate Commissioner	Excused	
Ellen Ellenburg	Councilwoman	Present	
Robert Walls	Chairman	Present	
Kevin Burge	Commissioner	Present	
Mary Ann White	Commissioner	Present	
Robert Johnson	Commissioner	Present	
Tom Gorang	Commissioner	Present	
Deb Walton	Vice-Chairman	Excused	
John Benthall	Commissioner	Present	

C. STAFF PRESENT

Amber Abbey, Planning/Zoning
Racheal Boggs, Clerk's Office

D. APPROVAL OF MINUTES

1. Planning Commission - Regular Meeting - Feb 9, 2016 5:00 PM

RESULT:	**ACCEPTED [UNANIMOUS]**
MOVER:	Robert Johnson, Commissioner
SECONDER:	Tom Gorang, Commissioner
AYES:	Ellenburg, Walls, Burge, White, Johnson, Gorang
EXCUSED:	Kray, Walton

E. SPECIAL USE

F. SITE PLAN REVIEW

1. SPR #16-11

   By: RBF Construction, Inc.
   4140 Morrish Rd.

Minutes Acceptance: Minutes of Mar 15, 2016 5:00 PM (Approval of Minutes)

Re: 3265 Card Dr. Burton, MI 4829
59-33-501-020 / M-1 Light Industrial

For: 40' x 16' addition to the existing building

Allen Dory with RBF Construction, Inc. stated he is here to answer any questions the Planning Board may have about the 16 foot Addition to the Atlas Outdoors building.

Mrs. Abbey stated there is a correction on the plan; the address is 3265 not 3625. There is no need to resubmit this because she has made the changes. They are eliminating some required spaces with this addition. They have five spaces in the front. They have six unstriped and we require at least three of them to be striped. She spoke with the property owner and the contractor and they are both aware that eight spaces need to be striped on the property. The administration recommends approval.

Mr. Gorang stated he likes the detail in the plans.

Mrs. Ellenburg stated she was aware of some incidents with stolen vehicles in the past with Atlas and she asked if they will be taking extra security precautions.

Mr. Dory stated he is the contractor for the building and he is unaware of the incident.

Mrs. Abbey stated security measures can be added if the board thinks they are necessary.

Mrs. Ellenburg asked Mr. Dory if he will suggest it to the property owner.

Mr. Johnson stated there is a proposed six foot fence to go around the property which will be helpful with the security of the building and equipment.

RESULT:	**CARRIED [UNANIMOUS]**
MOVER:	Kevin Burge, Commissioner
SECONDER:	John Benthall, Commissioner
AYES:	Ellenburg, Walls, Burge, White, Johnson, Gorang, Benthall
EXCUSED:	Kray, Walton

2. SPR #16-13

By: Dr. Rommel Aquino M.D.
6175 Lapeer Rd.
Burton, MI 48509

Re: 6175 Lapeer Rd. Burton, MI 48509
59-13-502-005 / 59-13-502-004

For: Addition to existing office

Minutes Acceptance: Minutes of Mar 15, 2016 5:00 PM (Approval of Minutes)

Rick Swihart of Creekwood Architecture is here to represent property owner Dr. Rommel Aquino. This is a 1,000 square foot addition to the building as well as additional parking.

Mrs. Abbey stated in 2014 Dr. Aquino came to the Planning Commission for an addition. At that time, they had sidewalks on the site plan. However, when the footing was done in December of 2015, it made it difficult to put sidewalks in so they were not done. Therefore, with this new addition the administration recommends the board place a condition on the property owner to install sidewalks prior to a building permit being issued or post a performance bond for the amount of the installation of the sidewalk with our office before the building permit can be issued. The administration recommends approval.

Rick Swihart said the property owner has agreed to put the sidewalks in on the entire parcel before occupancy not before building because there is extensive work that needs to be done.

Mrs. Abbey said the problem is occupancy has already been issued on the other portion of the property and the applicant failed to put the required sidewalk in.

Mr. Johnson stated there is no address on the property and he would like that added.

Mr. Burge asked that a numerical address be placed on the existing building before construction.

Mrs. Ellenburg restated the motion to include sidewalks being installed or a performance bond being posted and a six inch numerical address to be placed on the building before contruction begins.

RESULT:	**CARRIED AS AMENDED [UNANIMOUS]**
MOVER:	Ellen Ellenburg, Councilwoman
SECONDER:	Tom Gorang, Commissioner
AYES:	Ellenburg, Walls, Burge, White, Johnson, Gorang
EXCUSED:	Kray, Walton

G. ADMINISTRATIVE SITE PLAN REVIEW

1. SPR #16-08

By: Repossession Management Services, LLC.
P.O. Box 141726
Grand Rapids, MI 49514

Re: 4396 S. Dort Hwy.
Burton, MI 48529

For: Vehicle Repossession

Minutes Acceptance: Minutes of Mar 15, 2016 5:00 PM (Approval of Minutes)

Mr. Johnson asked if City Council approved the rezoning for Repossession Management Services, LLC.

Mr. Abbey said yes.

Ms. White asked if there were any restrictions placed on them regarding hours of operation.

Mrs. Abbey said they cannot put restrictions on zoning changes. So, no.

2. SPR #16-09

By: Alpine Field Services, LLC.
28560 Van Dyke Ave.
Warren, MI 48093

Re: 4071 Saginaw St. Burton, MI 48529

For: Office

Mrs. Ellenburg asked if Alpine Field Services, LLC will need approval for residency.

Mrs. Abbey said there is a variance for the property if they choose to do it. Currently, she doesn't believe anyone intends to live there. If they decided to, they would have to notify us only for tax purposes.

3. SPR #16-10

By: Michael Bully
8034 Pepperwood Dr.
Grand Blanc, MI 48439

Re: 4235 Davison Rd. Burton, MI 48509

For: Office

4. SPR #16-12

By: William Dempsey
P.O. Box 190331
Burton, MI 48519

Re: 4101 S. Dort Hwy. Burton, MI 48529

For: Used car wholesales

H. AUDIENCE PARTICIPATION

Minutes Acceptance: Minutes of Mar 15, 2016 5:00 PM (Approval of Minutes)

None.

I. BOARD DISCUSSION

Mr. Walls introduced Mr. Benthall as the newest member to the Planning Board.

The Board members welcomed Mr. Benthall.

Mrs. Ellenburg expressed concern about Zeibart on Saginaw Street. She said it is beginning to look like a large car lot. Is there a restriction for the number of vehicles they can have?

Mrs. Abbey said she can look it up.

The Board discussed the memorandum received by Rowe Professional Services. They decided the following:

- Not to meet with Rowe in July or August due to lack of public interest during the summer with the understanding that this will add 2-4 months to the project.
- To schedule any necessary Special Planning meetings for the purpose of master plan discussion with Rowe on the fourth Tuesday of the month when necessary.
- Include all four of the optional public input opportunities in the project scope of the master plan. These include: Community Visioning Meeting, Social Media, Community Remarks and Youth Mini-Charette.

Mrs. Abbey stated she has been working on getting background information for the city. If anyone has history information, photos or anything else that would be helpful to be included in the background information for the master plan.

Mrs. Ellenburg suggested contacting Mona Miron.

Mrs. Abbey asked the board to think about who they would like to have as stakeholders for the City of Burton. Also, she would like to start sending board packets electronically. We will be here an hour before our next meeting to help get everyone set up.

The next regularly scheduled meeting will be held on Tuesday, April 12, 2016 at 5:00 p.m.

Meeting was adjourned at 6:00 PM.

Minutes Acceptance: Minutes of Mar 15, 2016 5:00 PM (Approval of Minutes)

SPR #16-16

By: South Flint Tabernacle
P.O. Box 7008
Flint, MI 48507

Re: 1291 E. Maple Ave. Burton, MI 48529
59-31-400-103, R-1C / HRM Zoned

For: Special use to construct a new building for a church in R-1C and HRM zones

ATTACHMENTS:

- 16-16 (PDF)

City of Burton

Department of Public Works
4093 Manor Drive
Genesee County, Burton, Michigan 48519
(810) 742-9230

Date Filed: 3-18-16
Fee Paid: $ 600.00
Receipt #:
Check #: 72256
Received by: AA
Date Mailed:

APPLICATION FOR PLANNING COMMISSION SPECIAL USE:

BCPC Case #: 16-16

PLEASE PRINT

DATE OF PLANNING COMMISSION HEARING: April 12, 2016 AT 5:00 P.M.

APPLICANTS NAME: South Flint Tabernacle

APPLICANTS ADDRESS: P.O. Box 7008

CITY: Flint, MI 48507

APPLICANTS PHONE: 810-397-9233

ADDRESS AND PARCEL OR LOT NUMBER:

1291 E. Maple Ave. Flint, MI 48507 59-31-400-103

NATURE OF REQUEST (PERMITTED USE AFTER SPECIAL APPROVAL): Special use for Proposed Church Facility in R1-C and HRM zoning

APPLICANTS SIGNATURE: Rev. Robert E. Heneza, Pastor

MANDATORY ATTENDANCE AT THE ABOVE MEETING IS ACKNOWLEDGED BY THE APPLICANTS SIGNATURE.

Attachment: 16-16 (2253 : SPR #16-16)

BURTON

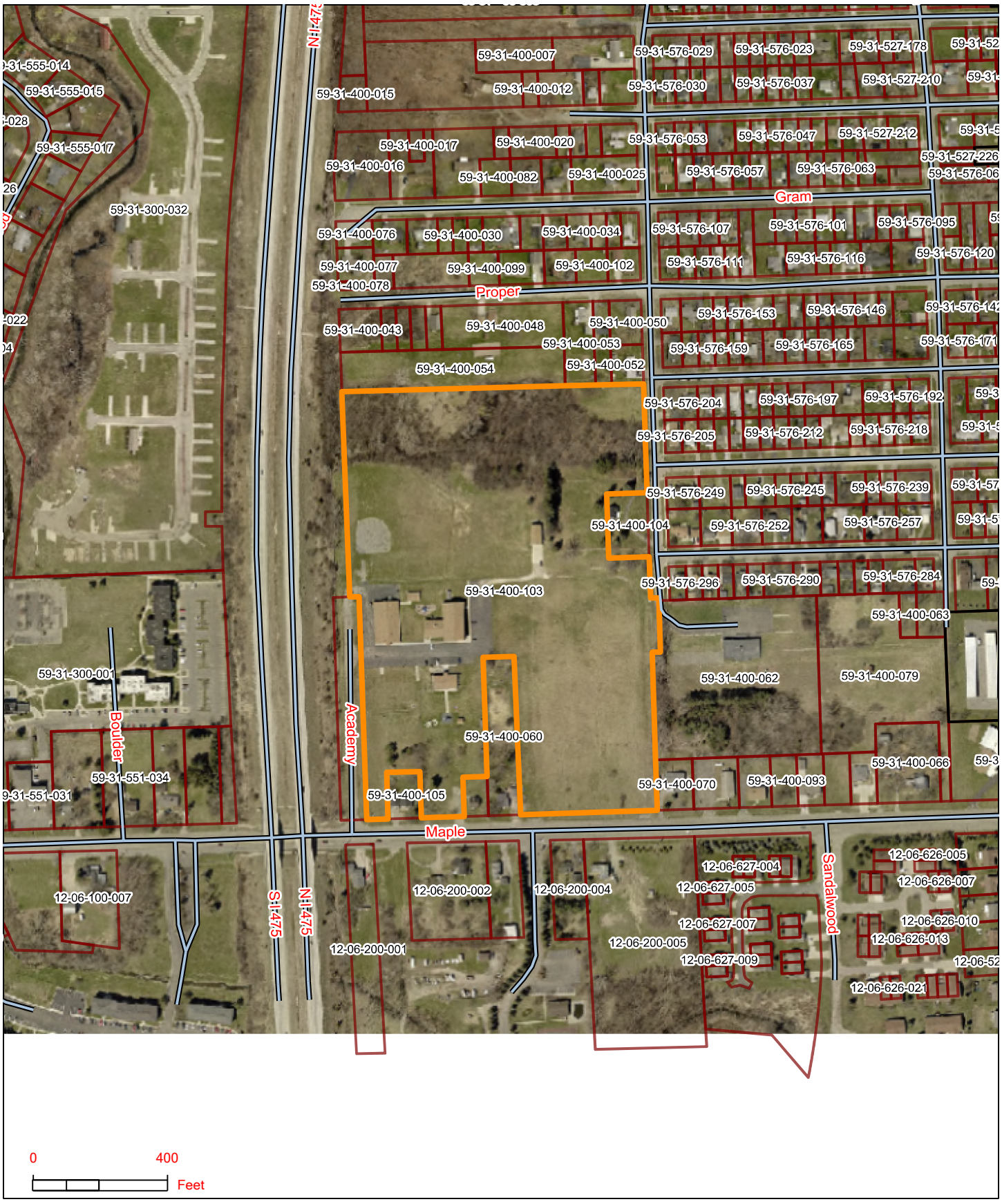

Attachment: 16-16 (2253 : SPR #16-16)

SPR #16-17

By: South Flint Tabernacle
P.O. Box 7008
Flint, MI 48507

Re: 1291 E. Maple Ave Burton, MI 48529
59-31-400-103

For: Construction of a New Church Facility

ATTACHMENTS:

- 16-17 (PDF)

City of Burton

Department of Public Works
4093 Manor Drive
Genesee County, Burton, Michigan 48519
(810) 742-9230

APPLICATION FOR SITE PLAN REVIEW

DATE FILED: 3-18-16
FEE: 200.00
RECEIPT NO: _____
CHECK NO: 72255.

SPR #: 16-17

PLEASE PRINT

DATE OF PLANNING COMMISSION MEETING: April 12, 2016

APPLICANTS NAME: South Flint Tabernacle

APPLICANTS ADDRESS: P.O. Box 7008 Flint, MI 48507

APPLICANTS PHONE NO: 810-397-9233

PROPOSED NAME OF BUSINESS: South Flint Tabernacle

SITE ADDRESS: 1291 E. Maple Ave. Flint, MI 48507

SUBDIVISION & LOT # OR PARCEL NUMBER: 59-31-400-103

RE: Proposed Church Facility

APPLICANT: IT IS TO YOUR ADVANTAGE TO ATTEND THE ABOVE SCHEDULED MEETING. THE PLANNING COMMISSION MAY HAVE QUESTIONS THAT DIRECTLY AFFECT APPROVAL, DENIAL, OR POSTPONING UNTIL THESE QUESTIONS CAN BE ANSWERED.

APPLICANTS SIGNATURE: Rev. Robert E. Hensel, Pastor

NOTE: All site plans must be filed at least two (2) weeks prior to the Planning Commission hearing and **MUST** comply with the procedures set forth in Section 157.092 of Codified Ordinance as attached. Must include **twelve (12) sets** of prints in order to process the application.

Attachment: 16-17 (2254 : SPR #16-17)

SITE PLAN OF PROPOSED
SOUTH FLINT TABERNACLE
CITY OF BURTON, GENESEE COUNTY, MI
MARCH 2016

GENERAL SITE DATA:

CURRENT ZONING	R1-C and HRM
PARCEL NUMBER	59-31-400-103
TOTAL GROSS ACRES	24.5± Gross Acres
PROPOSED PROJECT AREA	10± Acres
AREA OF EXISTING BUILDINGS	25,492 Sq Ft
AREA OF PROPOSED BUILDING	69,220 Sq Ft
NUMBER OF STORIES PROPOSED	1.5 STORIES
MAX. PARCEL COVERAGE ALLOWED	R1-C = 35% HRM = 15%
MAX. PARCEL COVERAGE PROVIDED	8.9%

SETBACK REQUIREMENTS:

	R1-C	HRM	PROVIDED
HEIGHT:	35'	100'	62.4' FRONT OF BUILDING 29.3' BACK OF BUILDING
FRONT:	20'	40'	225'
SIDE:	5' (15' TOTAL)	40'	78' min.
REAR:	30'	40'	297'

PARKING DATA:

SIZE STANDARDS

SPACE WIDTH	9'
SPACE LENGTH	19'
ACCESS ISLE WIDTH	25'

REQUIRED FOR CHURCHES:

1 SPACE FOR EACH 3 SEATS (PEWS = 1 SEAT FOR EACH 2' OF PEW LENGTH)

CALCULATION:

TOTAL PEW LENGTH = 1968' / 2' = 984 SEATS / 3 = 328 SPACES REQUIRED FOR CHURCH (A MIN. OF 8 MUST BE BARRIER FREE)

PROVIDED:

TOTAL PROPOSED SPACES = 345 (11 ARE BARRIER FREE)

COLLECTIVE PARKING BETWEEN VARIOUS BUILDINGS/USES IS AVAILABLE, IF NEEDED

LOADING AND UNLOADING:

REQUIREMENT:

1 SPACE, PLUS 1 SPACES FOR EACH 20,000 SQ FT IN EXCESS OF 20, 000 SQ. FT.
MIN SIZE SHALL BE 10' WIDE X 40' LONG AND 14' HIGH

CALCULATION:

1 SPACE PLUS 69,220 SQ FT - 20,000= 49, 200 / 20, 000 = 2.5 +1 = 3.5 SPACES

PROVIDED ON THIS PLAN

4 SPACES @ 10' X 50' EACH

ADDITIONAL NOTES:

1) ALL EXISTING STORM SEWERS ARE PRIVATELY OWNED AND MAINTAINED BY THE PROPERTY OWNER. NO PUBLIC SANITARY SEWER, STORM SEWER, OR WATERMAIN IS PROPOSED FOR THIS PROJECT. SANITARY SEWER AND WATER SERVICES ARE PRIVATE. A FIRE SUPPRESSION SYSTEM IS PROPOSED FOR THE NEW BUILDING..

2 FLEIS & VANDENBRINK ENGINEERING, INC. HAS NOT REVIEWED THIS PROJECT FOR SOIL CONTENT. WE SUGGEST THAT THE CONTRACTOR CONTACT A SOILS ENGINEER WITH REGARD TO THE SOIL CONDITIONS. SOIL BEARING SUPPORT FOR THE FOUNDATION AND SLAB WORK SHALL BE TESTED BY AN INDEPENDENT TESTING SERVICE, LICENSED TO PROVIDE SUCH SERVICE, PRIOR TO PLACING SUCH FOUNDATION AND SLAB WORK. TESTING IS THE RESPONSIBILITY OF THE CONTRACTOR.

3) THERE ARE NO STATE OR FEDERALLY REGULATED WETLANDS OR FEMA FLOOD PLAIN ON THIS SITE.

4) NPDES-NOTICE OF COVERAGE STATEMENT:
THE TOTAL DISTURBED AREA OF THIS PROJECT IS APPROXIMATELY 10.0 ACRES. AN NPDES-NOTICE OF COVERAGE IS REQUIRED FOR THIS PROJECT. ALSO SEE THE SOIL EROSION AND SEDIMENTATION CONTROL PLAN.

5) EXISTING UTILITIES HAVE NOT BEEN EXPOSED FOR VERIFICATION OF LOCATION AND ELEVATION AT THIS TIME. THE EXISTING UTILITIES DEPICTED ON THIS DRAWING WERE DETERMINED FROM ON-SITE OBSERVATIONS AND FROM AVAILABLE RECORDS AS PROVIDED BY THE UTILITY OWNERS. FLEIS & VANDENBRINK ENGINEERING, INC. IS NOT RESPONSIBLE FOR THE ACCURACY OF THE INFORMATION PROVIDED OR THE LOCATIONS AT WHICH SERVICE WILL BE PROVIDED.

6) NO PROPOSED BUSINESS SIGNS ARE SHOWN AT THIS TIME. PLACEMENT OF ANY ADDITIONAL BUSINESS SIGNS REQUIRES A SEPARATE SIGN PERMIT APPLICATION THAT MUST BE PROCESSED THROUGH THE CITY UPON RECEIVING SITE PLAN APPROVAL.

7) STATEMENT OF ADVERSE EFFECTS: THE OWNER/DEVELOPER OF THIS PROJECT DOES NOT ANTICIPATE CONSTRUCTION OF THIS FACILITY WILL CREATE ANY ADVERSE EFFECTS TO THE SURROUNDING AREA.

MUNICIPAL REVIEWS AND APPROVALS

TYPE OF REVIEW	ADMINISTRATIVE	PLANNING COMMISSION	CITY COUNCIL
SPECIAL LAND USE PERMIT	-	-	N/A
SITE PLAN APPROVAL	-	-	N/A

REVIEWING AGENCY / UTILITY COMPANY LIST

AGENCY/UTILITY COMPANY	DATE SUBMITTED	CONTACT PERSON	TELEPHONE NUM.
CITY OF BURTON - PLANNING DEPARTMENT	MARCH 2016	AMBER ABBEY	(810) 742-9230
GENESEE CO. DRAIN COMMISSIONER - WWS	MARCH 2016	LYNNETTE MEINZ, PE	(810) 742-7870
GENESEE CO. DRAIN COMMISSIONER - SWM	MARCH 2016	TOM JONES, PE	(810) 732-1590
CONSUMERS ENERGY EXISTING GAS	MARCH 2016	SAL DELISI	(810) 760-3486
EXISTING ELECTRIC	MARCH 2016	MARCEY CONN	(810) 760-3506
AT&T	MARCH 2016	DIANE ROEHM	(248) 456-0829
COMCAST CABLEVISION	MARCH 2016	TOM DICKINSON	(586) 883-7412

Know what's below. Call before you dig.

APPLICANT/OWNER

SOUTH FLINT TABERNACLE
1291 EAST MAPLE AVENUE
BURTON, MI 48529
PHONE: 810-743-1710

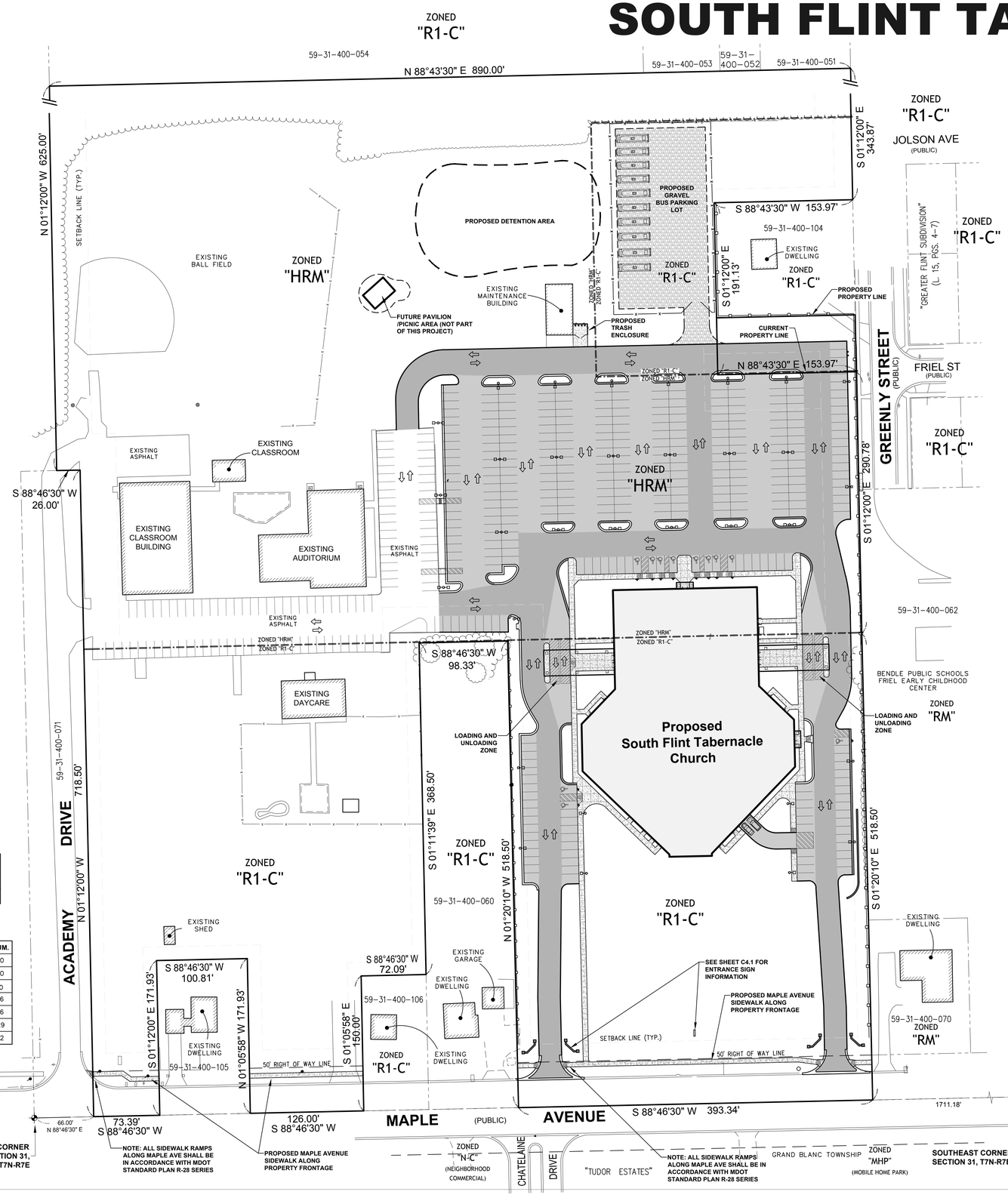

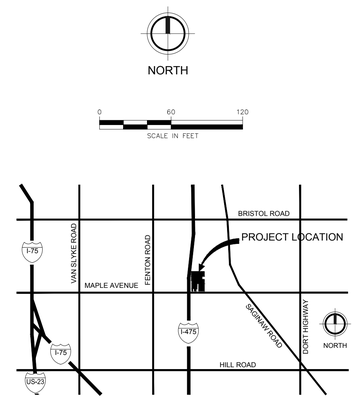

LOCATION MAP

NOT TO SCALE

LEGAL DESCRIPTION (59-31-400-103)

PART OF THE SOUTHEAST 1/4 OF SECTION 31, T7N-R7E, CITY OF BURTON, GENESEE COUNTY, MICHIGAN, DESCRIBED AS FOLLOWS: BEGINNING AT A POINT ON THE SOUTH LINE OF SECTION 31 WHICH IS N 88°46'30 E 66.00 FEET FROM THE SOUTH 1 /4 CORNER OF SAID SECTION 31; THENCE N 01°12'00 W 718.50 FEET; THENCE S 88°46'30 W 26.00 FEET; THENCE N 01°12'00 W 625.00 FEET; THENCE N 88°43'30 E 890.00 FEET TO THE WEST RIGHT OF WAY LINE OF GREENLY STREET; THENCE S 01°12'00 E, ALONG SAID RIGHT OF WAY LINE, 343.87 FEET; THENCE S 88°43'30 W 153.97 FEET; THENCE S 01°12'00 E 191.13 FEET; THENCE N 88°43'30 E 153.97 FEET, TO SAID WEST RIGHT OF WAY LINE OF GREENLY STREET; THENCE S 01°12'00 E, ALONG SAID RIGHT OF WAY LINE, 290.78 FEET; THENCE S 01°20'10 E 518.50 FEET TO THE SOUTH LINE OF SAID SECTION 31; THENCE S 88°46'30 W, ALONG SAID SOUTH LINE, 393.34 FEET; THENCE N 01°20'10 W 518.50 FEET; THENCE S 88°46'30 W 98.33 FEET; THENCE S 01°11'39 E 368.50 FEET; THENCE S 88°46'30 W 72.09 FEET; THENCE S 01°05'58 E 150.00 FEET TO THE SOUTH LINE OF SAID SECTION 31; THENCE S 88°46'30 W, ALONG SAID SOUTH LINE, 126.00 FEET; THENCE N 01°05'58 W 171.93 FEET; THENCE S 88°46'30 W 100.81 FEET; THENCE S 01°12'00 E 171.93 FEET TO SAID SOUTH LINE; THENCE S 88°46'30 W, ALONG SAID SOUTH LINE, 73.39 FEET TO THE PLACE OF BEGINNING, CONTAINING 24.54± GROSS ACRES OF LAND, MORE OR LESS. AND BEING SUBJECT TO THAT PART NOW USED AS MAPLE AVENUE, SO CALLED, AND ALSO BEING SUBJECT TO ANY RECORDED OR UNRECORDED EASEMENTS OF BENEFIT OR BURDEN.

SHEET INDEX

NO.	TITLE
C1.0)	OVERALL PROPERTY LAYOUT AND PROJECT DATA
C2.1)	PROJECT NOTES & DETAILS
C2.2)	ADDITIONAL PROJECT DETAILS
C3.0)	EXISTING CONDITIONS AND REMOVALS
C4.1)	SITE LAYOUT PLAN - SOUTH
C4.2)	SITE LAYOUT PLAN - NORTH
C5.0)	SOIL EROSION & SEDIMENTATION CONTROL PLAN
C6.1)	GRADING AND UTILITY PLAN - SOUTH
C6.2)	GRADING AND UTILITY PLAN - NORTH
C7.0)	STORM WATER MANAGEMENT PLAN
C8.1)	LANDSCAPE PLAN - SOUTH
C8.2)	LANDSCAPE PLAN - NORTH

ATTACHMENTS:

- C.O.B. STANDARD CONSTRUCTION NOTES
- C.O.B. PRESSURE PIPE CONSTRUCTION STANDARD DETAILS
- C.O.B. STANDARD SANITARY SEWER DETAIL SHEET
- C.O.B. STORM SEWER STANDARD DETAILS AND NOTES
- G.C.D.C. - WWS SOIL EROSION KEY SHEET

NOTE: TOTAL NUMBER OF SHEETS IN THIS SET OF PLANS = 17
ARCHITECTURAL, STRUCTURAL, AND MEP PLANS FOR THIS PROJECT ARE NOT INCLUDED IN THIS SET OF PLANS. THIS INFORMATION HAS BEEN PREPARED BY OTHERS.

NOTE: THIS PROJECT HAS BEEN DESIGNED IMPLEMENTING THE LATEST GCDC-WWS DESIGN SPECIFICATIONS. CAREFULLY REVIEW THE NOTES, DETAILS, AND DESIGN PRIOR TO SUBMITTING A BID. FULL COMPLIANCE WITH THE NEW STANDARDS WILL BE REQUIRED.

FLEIS & VANDENBRINK
DESIGN. BUILD. OPERATE.
9475 Holly Rd, Suite 201
Grand Blanc, MI 48439
P: 810.743.9120
F: 810.743.1797

PART OF SECTION 31, CITY OF BURTON, GENESEE COUNTY, MI
SITE PLAN FOR PROPOSED CHURCH FACILITY
OVERALL PROPERTY LAYOUT AND PROJECT DATA

NOT FOR CONSTRUCTION

MARCH 2016

F&V PROJECT NO.
824140

C1.0

Attachment: 16-17 (2254 : SPR #16-17)

824140_C1.0.lisae

STANDARD NOTES FOR COMMERCIAL SITE PLANS

GENESEE COUNTY DRAIN COMMISSIONER 10 STANDARD NOTES FOR SITE PLANS

1. EXTENSION OF PUBLIC UTILITIES: ***(NO PUBLIC UTILITIES ARE PROPOSED FOR THIS PROJECT)***

All public sanitary sewer and/or watermain **SHALL** be extended to the furthest limits of the property, including corner lots, with the pipe size and material approved by Genesee County Drain Commissioner's Office - Division of Water and Waste Services (GCDC - WWS). This is necessary for plan approval. For water service of one inch (1") or less or a building on a corner lot, the requirements to extend the public watermain and/or sanitary sewer along both property lines will be reviewed. Final determination shall be made by GCDC - WWS.

2. WATERMAIN LOOPING: ***(NO PUBLIC WATERMAIN IS PROPOSED FOR THIS PROJECT)***

All public watermains shall be looped whenever possible. The pipe size requirement shall be approved by GCDC - WWS.

3. INDUSTRIAL PRETREATMENT PROGRAM (IPP): ***(PERMIT TO BE OBTAINED PRIOR TO CONSTRUCTION)***

This permit is required for all commercial (non residential) and industrial discharges. The OWNER shall obtain an Industrial Pretreatment Discharge Permit prior to the issuance of a Sewer Connection Permit. Industrial Discharge Permits are non-transferable. Changes in facility use will require new Industrial Discharge Permit. For more information call the Anthony Ragnone Treatment Plant at (810) 232-7622.

4. SOIL EROSION: ***(PERMIT TO BE OBTAINED FROM CITY OF BURTON PRIOR TO CONSTRUCTION)***

The DEVELOPER shall submit a detailed Soil Erosion and Sedimentation Control plan and obtain an Act 451 Part 91, Soil Erosion and Sedimentation Control permit. This includes the payment of fees and the providing of necessary bonds. **No earth changes or excavation shall be started prior to the issuance of this permit.** The DEVELOPER shall protect all existing and proposed storm sewer facilities on and adjacent to the site during excavation and construction. All sediment shall be contained on site. Any silt in county drains, storm sewer, culverts, etc. as a result of this project, shall be removed by the DEVELOPER at the cost of the DEVELOPER.

5. FLOODPLAIN OR WETLAND CONSTRUCTION: ***(NO CONSTRUCTION IS PROPOSED WITHIN A FLOODPLAIN OR WETLAND FOR THIS PROJECT)***

The DEVELOPER shall apply to the Michigan Department of Environmental Quality (MDEQ) for a permit for the alteration and/or occupation of a floodplain or floodway, as required under PA 451. Evidence of this permit may be required prior to plan approval by GCDC - WWS.

6. NPDES STORM WATER DISCHARGE PERMIT: ***(NOTICE OF COVERAGE TO BE SUBMITTED BY THE CONTRACTOR WITH SESC PERMIT AFTER THE SESC PERMIT IS ISSUED BY THE CITY OF BURTON)***

The owner of the property shall obtain a NPDES Storm Water Discharge permit for construction activities from MDEQ as required under Public Act 451. The notice of coverage form shall be submitted through GCDC - WWS with the Soil Erosion Control permit application. All MDEQ fees shall accompany the Notice of Coverage. Evidence of this permit may be required prior to plan approval by GCDC - WWS.

7. GENESEE COUNTY PERMIT TO CONSTRUCT A PUBLIC UTILITY: ***(NO PUBLIC UTILITIES ARE PROPOSED FOR THIS PROJECT)***

After the approval of this preliminary plat or site plan, the DEVELOPER shall submit a detailed plan for construction of all public sanitary sewer and watermain. The plans must have GCDC - WWS approval, a S-permit issued, and approval from the MDEQ prior to beginning construction.

8. GENESEE COUNTY ROAD COMMISSION PERMIT: ***(NO CONSTRUCTION IS PROPOSED IN A COUNTY ROAD RIGHT OF WAY)***

The DEVELOPER shall obtain a permit from the Genesee County Road Commission (GCRC) to perform work within the GCRC Right-of-Way. All fees for the permit, bonds and insurances are the responsibility of the Developer.

9. MUNICIPALITY SANITARY SEWER AND WATER PERMIT: ***(PERMIT TO BE OBTAINED PRIOR TO CONSTRUCTION)***

Prior to the issuance of a building permit by the local municipality, the Developer shall be required to obtain a sanitary sewer and/or water tap-in permit from the local municipality, if authorized, or GCDC - WWS.

10. STATE CONSTRUCTION PERMITS: ***(NO PUBLIC UTILITIES ARE PROPOSED FOR THIS PROJECT)***

The sanitary sewer and watermain construction permits from the Michigan Department of Environmental Quality shall be submitted to the MDEQ after approval of the GCDC - WWS. Construction shall not begin until these state permits are issued.

SUPPLEMENTAL SITE PLAN NOTES

1. GENERAL PROJECT NOTES

(A) PRE-CONSTRUCTION MEETING

A pre-construction meeting shall be held prior to any work being performed on the project. The meeting time, place and attendees shall be arranged by the Construction Engineer for the project. The Contractor, municipality, GCDC - WWS, Genesee County Drain Commissioner's Office - Surface Water Management Division (GCDC - SWM), and the project architect and developer shall be invited, as a minimum to the pre-construction meeting.

(B) MISS DIG UTILITY ALERT AND FIELD LOCATION OF UTILITIES

Existing public utilities such as gas mains, underground telephone cables, underground electric cables, watermains, sanitary sewers, sanitary sewer house leads, storm sewers, house drains, sump leads and field drains are delineated by Fleis & VandenBrink engineering, inc. on the plans in accordance with information provided by the utility owners. **Fleis & VandenBrink Engineering, Inc.**, is not responsible for the accuracy of the information or the location at which their services exist. The contractor shall contact Miss Dig (1-800-482-7171) to locate and verify the location of existing utilities prior to beginning work. Due to the nature of underground construction, the contractor should expect to encounter underground utilities in addition to the ones shown on the plans.

None of the following are responsible for the accuracy of the existing utility information as shown on the plans or additional underground utilities that may be encountered during construction - Fleis & VandenBrink Engineering, Inc., the owner.

It is the contractor's responsibility to expose all existing utilities that are across the path of the proposed underground utility so the construction engineer may determine if a vertical conflict exists prior to his/her beginning construction. The cost of exposing these existing utilities shall be inclusive to the project. If the contractor elects not to expose these existing utilities prior to his/her beginning construction, he/she shall make any adjustments that the construction engineer determines necessary to the proposed underground utility to avoid these utilities, such as removing and relaying already completed portions of the project or deepening of portions of the proposed underground utility. These adjustments are the contractor's responsibility and shall be done at his/her expense with no additional cost to the owner.

If additional underground utilities, which are not shown on the plans or marked in the field by the utility owners, are encountered, the contractor shall also make construction engineer approved adjustments to the proposed underground utility to avoid these utilities or if the utility is broken, he/she shall repair the broken utility using like materials and with a method approved by the construction engineer. Field adjustment to the underground utility due to unmarked existing utilities or repair of existing utilities shall be the contractor's responsibility and shall be done at his/her expense with no additional cost to the owner.

(C) SUBSURFACE SOIL CONDITIONS

The Bidder and any sub-contractors shall make a personal investigation of the site and the existing surface and sub-surface soil conditions. Neither the Developer nor the Design Engineer will provide soil borings. The Contractor is responsible to acquaint their self with conditions of the work area. The Contractor is advised to determine the subsurface soil conditions and ground water conditions to his/her own satisfaction prior to bidding. No modifications to the unit prices bid for any item will be made due to variable subsurface soil conditions. Dewatering, if determined necessary by the Contractor, by well pointing or deep wells will be incidental to the installation cost of the utility. Any potential bidder making a personal investigation of the site shall first receive permission from the property owner, if a potential bidder intends to take soil borings or dig test holes he/she shall first receive written permission from the property owner to take soil borings or dig test holes. It shall be the potential bidder or his/her Sub-contractor's responsibility to restore the site of the test holes, as close as possible, to its original condition and have the final condition of the site approved by the property owner.

(D) MIOSHA SAFETY REQUIREMENTS

All work, work practice, and materials shall comply with all applicable State and Federal Safety, occupational, health and environmental regulations and also NFPA and ANSI codes, as applicable. All work inside a confined space, such as manholes or other underground structures, shall be coordinated with the utility owner and all worker safety requirements strictly enforced.

(E) TRAFFIC CONTROL

The Contractor shall execute the work in a manner such that traffic on all public roads is maintained and access is provided to all residences, businesses, and commercial establishments. Traffic shall be maintained in accordance with any traffic control plans and the current Edition of the Michigan Manual of Uniform Traffic Control Devices, as amended.

(F) SIGNING AND BARRICADING

Signing and barricading shall be provided by the Contractor in accordance with any details on the plans, the current Michigan Manual of Uniform Traffic Control Devices, and the requirements of the road agency for work done within a public right-of-way. Signs and barricades left in place after dark shall be lighted .

(G) PROTECTION OF HAZARDOUS AREAS

Excavation and hazardous areas shall be protected by barricades or snow fence. Barricades left in place at night shall be lighted.

(H) SURFACE RESTORATION

All areas disturbed during site construction shall be completely restored in strict compliance with specifications and to the satisfaction of the GCDC - WWS and the local municipality. All costs for cleanup, restoration work and other intermediate operations such as, but not limited to: construction signage; street sweeping and maintaining existing utilities shall be considered inclusive of total bid quantity items shown in the proposal. Areas disturbed during construction shall receive a four inch (4") application of topsoil, fertilizer, seed and mulch, according to the application rates specified for Class A Seeding. Restoration work should be performed as soon as possible after construction work is completed in a particular area. Upon the completion of work in an area, all excess soil materials, debris (regardless of type of material), and similar items shall be removed from the project area by the Contractor, and disposed of properly.

(I) NON-STOPPAGE CLAUSE

The Contractor shall be required to complete all work in an expeditious manner and shall not stop construction for extended periods once construction has begun.

(J) FINAL ELEVATION OF SURFACE UTILITIES

All final elevations of manhole castings, hydrants, valves and valve boxes shall be determined by the construction engineer in the field. Adjustments to be made at no additional cost to the Developer.

(K) UTILITY INFORMATION

Public utility information is delineated in accordance with locations provided by utility owners. The Design Engineer is not responsible for the accuracy of the information or the location at which these services exist. Differing field conditions shall be brought to the attention of the construction engineer.

(L) DISPOSAL OF EXCESS EXCAVATED SOIL MATERIAL

All excess excavated soil materials shall be disposed of by the Contractor at an off site location provided by the Contractor. On site disposal of excess excavated soil material by the contractor shall require approval of the developer.

Adjacent property owners shall be given preference for disposal sites. For Developer financed project, the Developer shall determine excess excavated soil material.

(M) SALVAGED MATERIALS

Salvageable materials shall become the property of the Developer, and shall be stored as directed by the Developer.

ALSO SEE CITY OF BURTON STANDARD NOTES AND DETAILS SHEETS ATTACHED WITH THESE PLANS

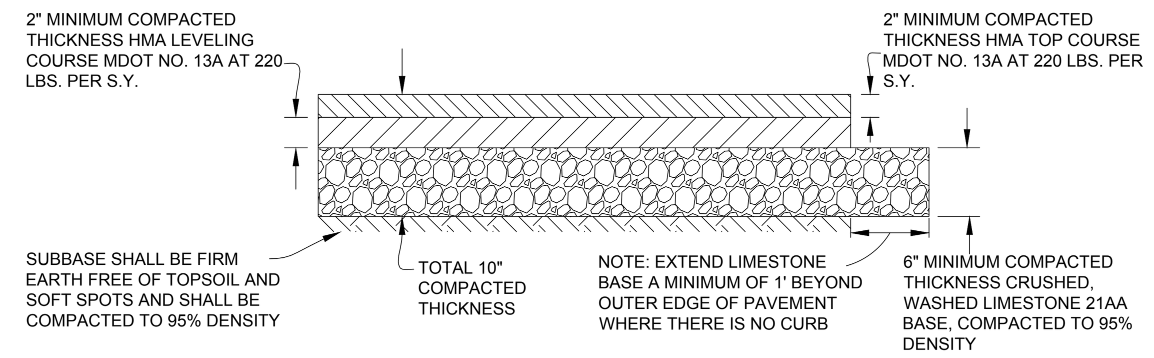

LIMESTONE BASE WITH HMA SURFACE

- OR -

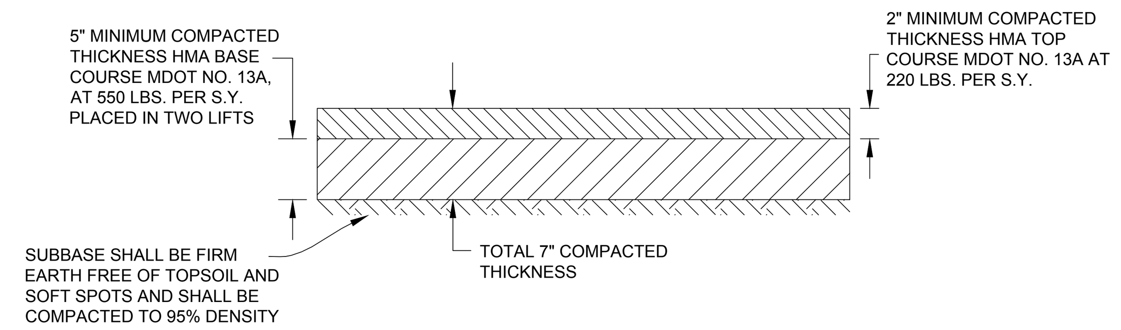

HMA BASE WITH HMA SURFACE

HEAVY DUTY PARKING LOT PAVEMENT CROSS SECTION

NOT TO SCALE

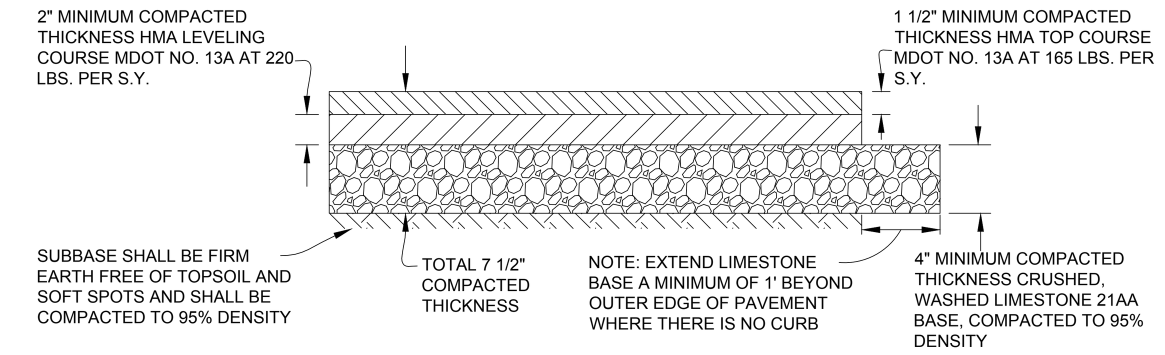

LIMESTONE BASE WITH HMA SURFACE

- OR -

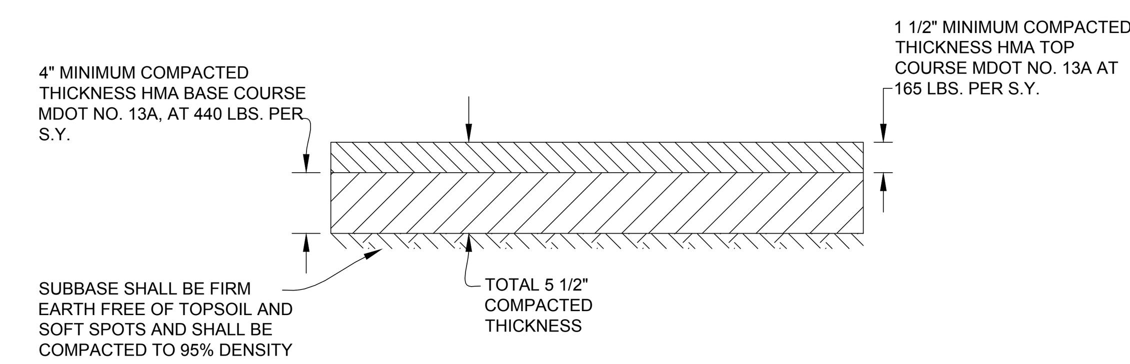

HMA BASE WITH HMA SURFACE

MEDIUM DUTY PARKING LOT PAVEMENT CROSS SECTION

NOT TO SCALE

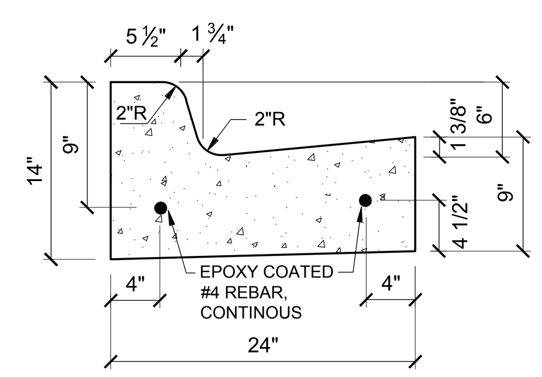

STANDARD CONCRETE CURB AND GUTTER DETAIL

NOT TO SCALE

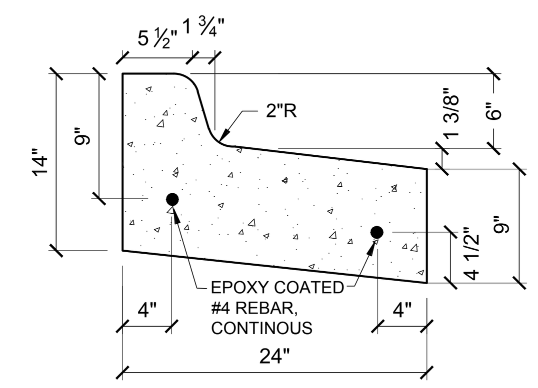

MODIFIED CONCRETE CURB AND GUTTER DETAIL

NOT TO SCALE

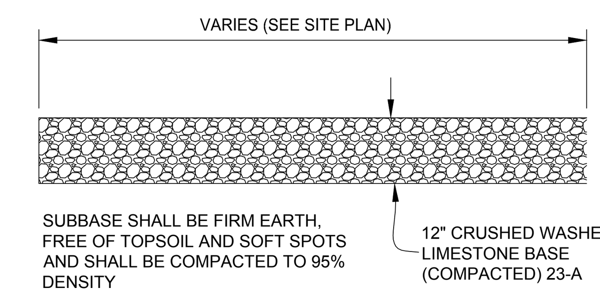

BUS PARKING LOT AGGREGATE CROSS SECTION DETAIL

NOT TO SCALE

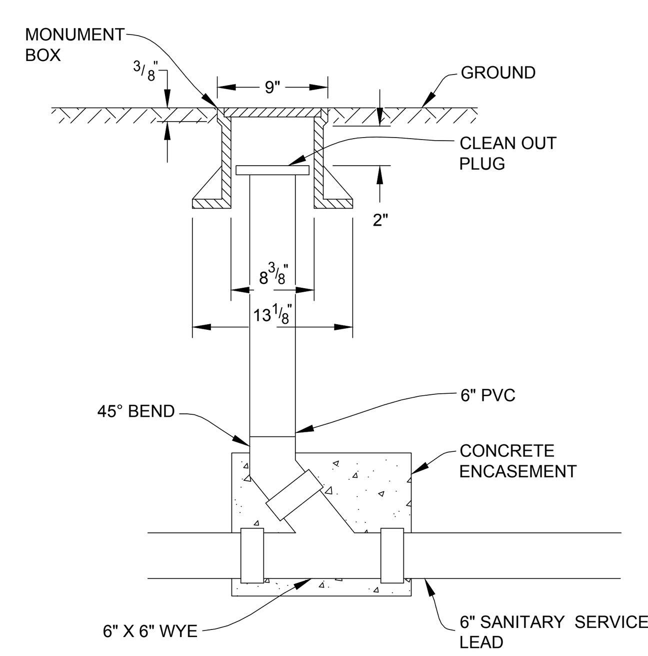

CLEAN OUT DETAIL

NOT TO SCALE

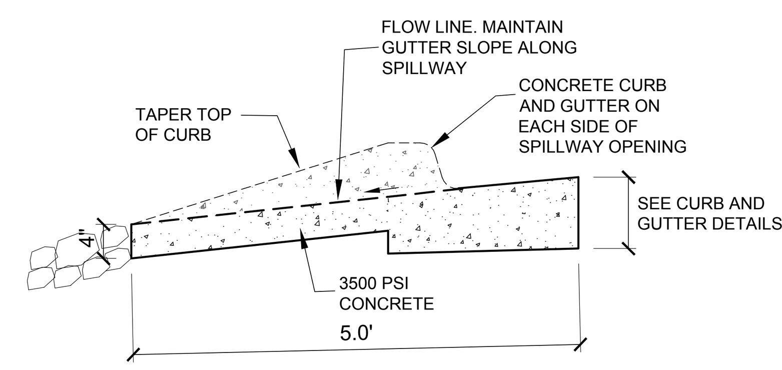

CROSS SECTION A-A

NOT TO SCALE

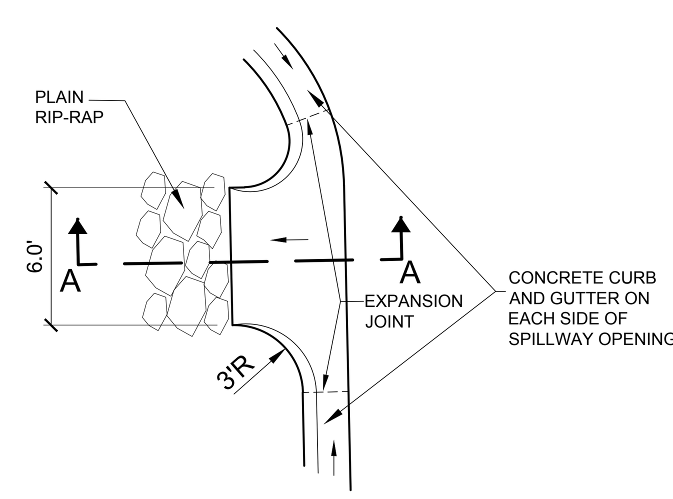

CONCRETE SPILL WAY DETAILS

NOT TO SCALE

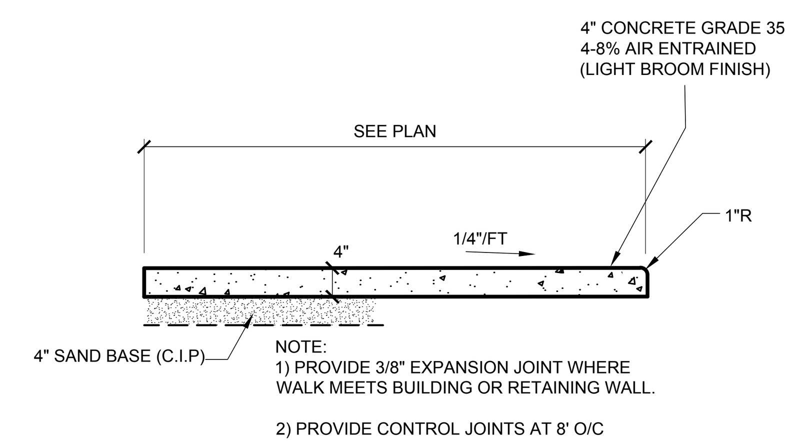

STANDARD SIDEWALK DETAIL

NOT TO SCALE

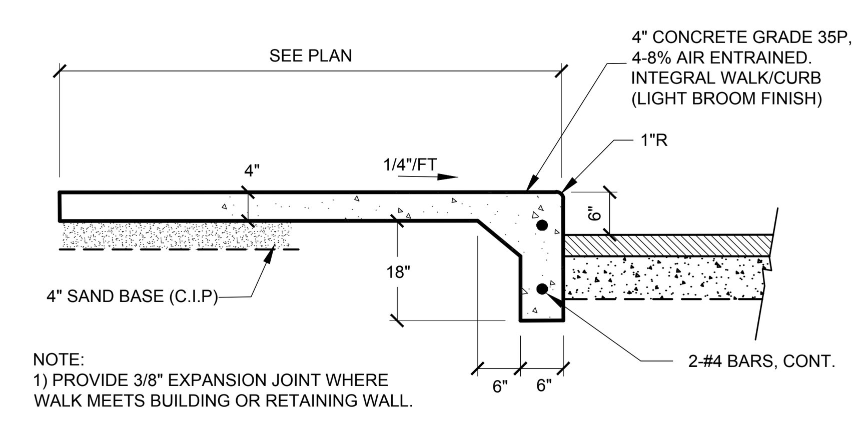

INTEGRAL SIDEWALK DETAIL

NOT TO SCALE

811 Know what's below. Call before you dig.

FLEIS&VANDENBRINK DESIGN. BUILD. OPERATE.
9475 Holly Rd, Suite 201
Grand Blanc, MI 48439
P: 810.743.9120
F: 810.771.7860

REVISION:

SOUTH FLINT TABERNACLE
PART OF THE SE 1/4 OF SECTION 31, T7N-R7E, CITY OF BURTON, MI
PROPOSED CHURCH FACILITY AND BUS PARKING

PROJECT NOTES & DETAILS

DESIGN TEAM: LME/DDH
CHECK BY: GLR/DDH MARCH 2016
DRAWING INFORMATION: 824140_C2.0 DET 031716 lisae

MARCH 2016

F&V PROJECT NO. 824140

C2.1

Attachment: 16-17 (2254 : SPR #16-17)

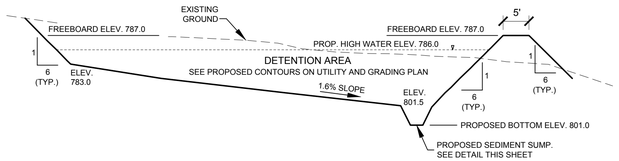

DETENTION AREA TYPICAL CROSS SECTION

NOT TO SCALE

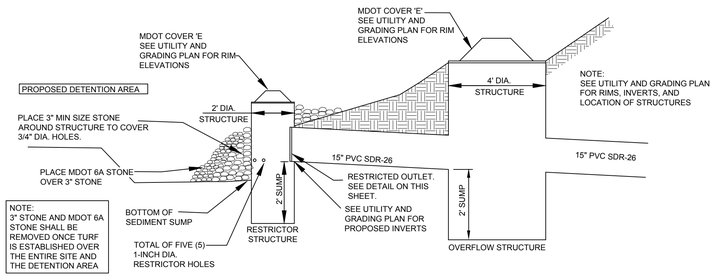

RESTRICTED OUTLET AND OVERFLOW STRUCTURE DETAIL

NOT TO SCALE

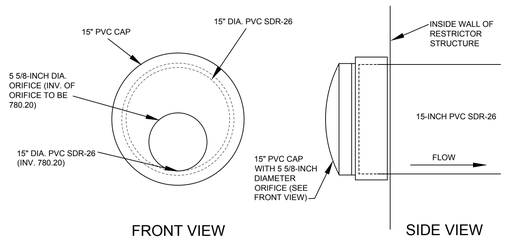

DETENTION AREA RESTRICTED OUTLET DETAIL

NOT TO SCALE

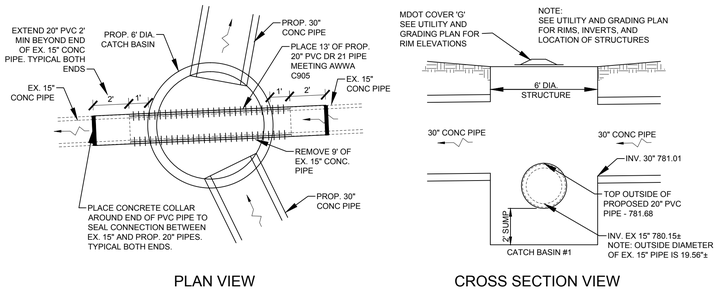

CATCH BASIN #1 DETAIL CROSSING EXISTING STORM SEWER

NOT TO SCALE

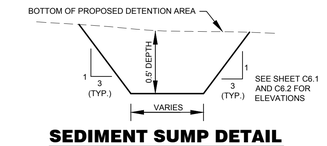

SEDIMENT SUMP DETAIL

NOT TO SCALE

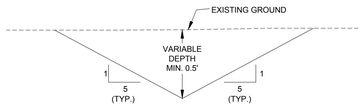

TYPICAL SWALE CROSS SECTION

NOT TO SCALE

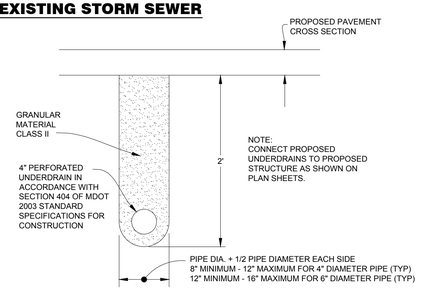

SUBGRADE UNDERDRAIN DETAIL
(MDOT STANDARD PLAN R-80-D)

NOT TO SCALE

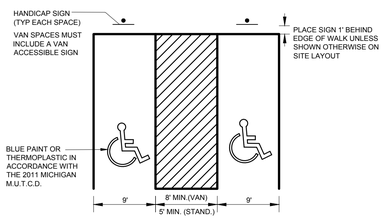

REFER TO THE FOLLOWING FOR ADDITIONAL DETAILS AND REQUIREMENTS:
1) ADA-ABA ACCESSIBILITY GUIDELINES FOR BUILDINGS AND FACILITIES AS AMENDED AUGUST 5, 2005.
2) ICC/ANSI A 117.1-1998 ACCESSIBLE AND USABLE BUILDINGS AND FACILITIES
3) UNLESS SPECIFIED OTHERWISE BY LOCAL REGULATIONS, MARKINGS SHALL BE BLUE IN COLOR AND PLACED USING PAINTS OR THERMOPLASTICS IN ACCORDANCE WITH THE 2011 MICHIGAN M.U.T.C.D.

BARRIER FREE PARKING DETAIL

NOT TO SCALE

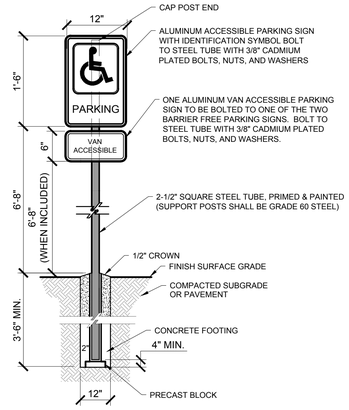

BARRIER FREE PARKING SIGN DETAIL

NOT TO SCALE

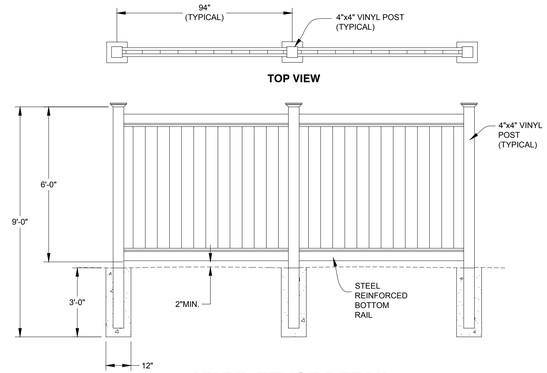

VINYL FENCE DETAIL

NOT TO SCALE

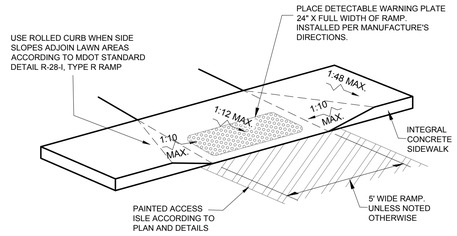

SIDEWALK RAMP DETAIL 'A'

NOT TO SCALE

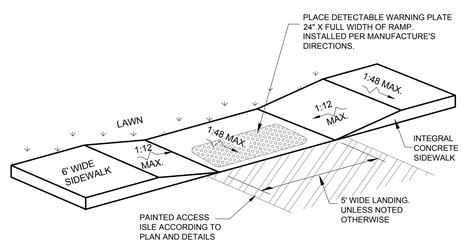

SIDEWALK RAMP DETAIL 'B'

NOT TO SCALE

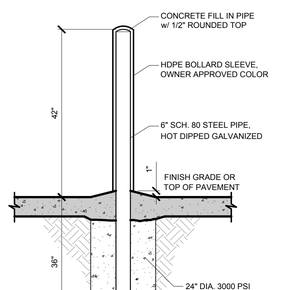

PIPE BOLLARD DETAIL

NOT TO SCALE

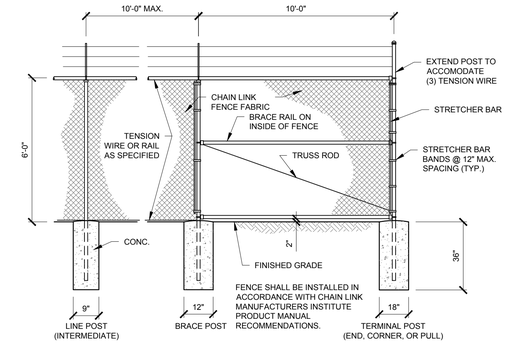

CHAINLINK FENCE DETAIL

NOT TO SCALE

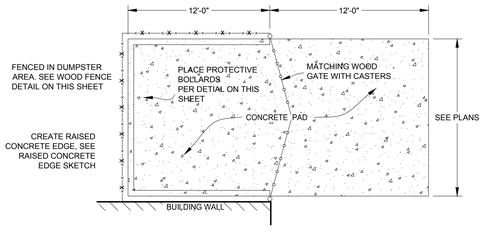

TRASH ENCLOSURE PAD DETAIL

NOT TO SCALE

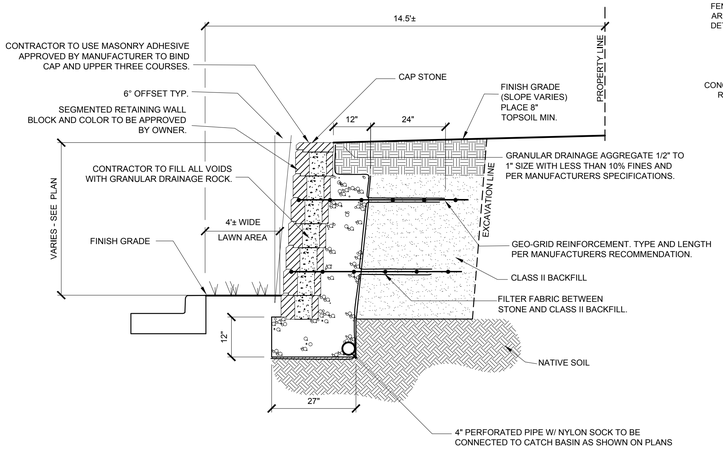

DECORATIVE SEGMENTED BLOCK WALL DETAIL

NOT TO SCALE

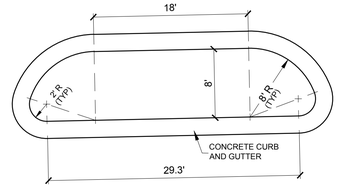

TYPICAL PARKING ISLAND DETAIL

NOT TO SCALE

811 Know what's below. Call before you dig.

FLEIS&VANDENBRINK
DESIGN. BUILD. OPERATE.
9475 Holly Rd, Suite 201
Grand Blanc, MI 48439
P: 810.743.9120
F: 810.771.7860

REVISION:

SOUTH FLINT TABERNACLE
PART OF THE SE 1/4 OF SECTION 31, T7N-R7E, CITY OF BURTON, MI
PROPOSED CHURCH FACILITY AND BUS PARKING
ADDITIONAL PROJECT DETAILS

DESIGN TEAM: LME/DDH
CHECK BY: GLB/DDH/MAC/JV 2016
DRAWING INFORMATION: 824140_C2.0 DET 031716 lisae

MARCH 2016
F&V PROJECT NO. 824140

C2.2

Attachment: 16-17 (2254 : SPR #16-17)

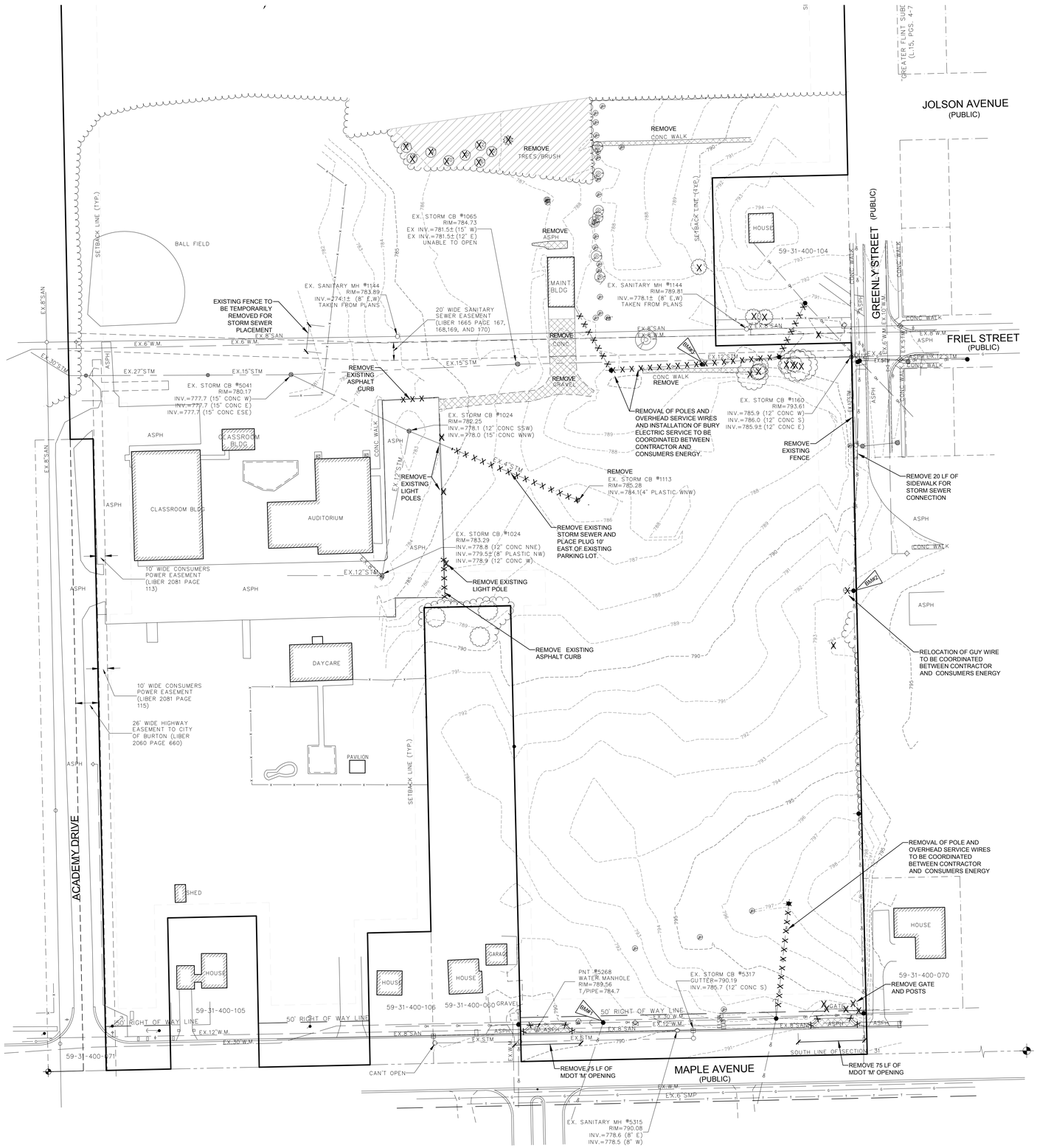

EXISTING FEATURES LEGEND

- TREE (DECIDUOUS)
- WOODS/BRUSH LINE
- TREE (CONIFEROUS)
- STUMP
- MANHOLE
- SANITARY CLEANOUT
- RD. CATCH BASIN
- SQ. CATCH BASIN
- FIRE HYDRANT
- WATER VALVE
- CURB STOP & BOX
- WATER MANHOLE
- WATER METER
- GUARD POST
- ELECTRICAL RISER/TRANSFORMER
- ELECTRICAL MANHOLE
- CABLE BOX
- TELEPHONE RISER
- TELEPHONE MANHOLE
- POWER POLE
- LIGHT POLE
- SPRINKLER VALVE
- GUY ANCHOR
- YARD LIGHT
- SIGN
- MAILBOX
- PIPE END
- SURVEY CONTROL POINT
- BENCHMARK
- SECTION CORNER
- WATERMAIN
- SANITARY SEWER
- STORM SEWER
- TELEPHONE
- ELECTRIC
- GAS
- OVERHEAD WIRES
- CABLE T.V.
- FENCE
- CULVERT

NOTE: ALL ITEMS LISTED ON THE LEGEND MAY NOT BE PRESENT ON DRAWING.

BENCHMARKS

BM #1 EL. 791.31
RAILROAD SPIKE IN NORTH FACE OF POWER POLE (NGVD 88)

BM #2 EL. 794.26
RAILROAD SPIKE IN WEST FACE OF POWER POLE (NGVD 88)

BM #3 EL. 790.26
RAILROAD SPIKE IN SOUTH FACE OF POWER POLE (NGVD 88)

REMOVAL LEGEND

- PAVEMENT/GRAVEL REMOVAL
- X X X X X X STRUCTURE / PIPELINE TO BE REMOVED
- X REMOVAL ITEM
- (F) REMOVE ALL EXIST. TREE STUMPS ON SITE

GENERAL NOTES:

1. THE TOPOGRAPHIC INFORMATION SHOWN WAS TAKEN FROM THE TOPOGRAPHIC SURVEY COMPLETED BY FLEIS & VANDENBRINK ENGINEERING, INC. IN SEPTEMBER OF 2015. SOME INFORMATION SHOWN (OUTSIDE THE PROJECT WORK AREA) WAS TAKEN FROM AVAILABLE RECORDS AND AERIAL PHOTOGRAPHY.
2. THE EASEMENTS DEPICTED ON THIS DRAWING WERE TAKEN FROM THE TITLE SEARCH PREPARED BY CISLO TITLE COMPANY DATED SEPTEMBER 2, 2015 WITH REFERENCE NUMBER: 15-71825.
3. EXISTING UTILITIES HAVE NOT BEEN EXPOSED FOR VERIFICATION OF LOCATION AND ELEVATION AT THIS TIME. THE EXISTING UTILITIES DEPICTED ON THIS DRAWING WERE DETERMINED FROM ON-SITE OBSERVATIONS AND FROM AVAILABLE RECORDS AS PROVIDED BY THE UTILITY OWNERS. FLEIS & VANDENBRINK ENGINEERING, INC. IS NOT RESPONSIBLE FOR THE ACCURACY OF THE INFORMATION PROVIDED OR THE LOCATIONS AT WHICH SERVICE WILL BE PROVIDED.
4. THERE ARE NO STATE OR FEDERALLY REGULATED WETLANDS OR FEMA FLOOD PLAIN WITHIN THE PROJECT AREA.

DEMOLITION NOTES:

1. PRIOR TO BEGINNING ANY OF THIS WORK THE CONTRACTOR SHALL NOTIFY THE CITY OF BURTON DPW OFFICE AND FILL OUT THE NECESSARY FORMS OR PERMITS. THE CONTRACTOR SHALL CUT AND SEAL THE EXISTING SANITARY LEAD AT THE PROPERTY LINE AND SHALL DISCONNECT THE EXISTING WATER SERVICE LEAD AT THE CURB BOX SHUT-OFF VALVE ON THE HOUSE SIDE OF THE VALVE.
2. ALL DEMOLITION WORK SHALL CONFORM TO ALL LOCAL CODES AND ORDINANCES. ALL DEMOLITION OPERATIONS SHALL COMPLY WITH MIOSHA REGULATIONS INSOFAR AS THEY APPLY TO THE REQUIRED WORK. A SOIL EROSION CONTROL PERMIT WILL BE REQUIRED PRIOR TO DEMOLITION.
3. THE CONTRACTOR SHALL REMOVE AND CLEAR ALL TREES, BRUSH, FENCES, BUILDINGS, CURB, AND ASPHALT AS SHOWN ON THE PLANS OR AS DIRECTED BY THE CONSTRUCTION ENGINEER.
4. ALL DEMOLITION MATERIAL SHALL BE PROPERLY REMOVED FROM THE SITE AND DISPOSED OF IN A LEGALLY DESIGNATED DISPOSAL AREA. NO ON-SITE BURNING WILL BE ALLOWED WITHOUT PROPER PERMISSION. PERMITS AND FEES FOR DISPOSAL OF DEMOLITION MATERIAL SHALL BE OBTAINED AND PAID FOR BY THE CONTRACTOR.
5. THE CONTRACTOR SHALL REMOVE ANY ITEMS FOUND DURING EXCAVATION SUCH AS WALLS, FOUNDATIONS AND FOOTINGS, IN THEIR ENTIRETY. ANY FOUND BUILDING DRAINS AND UTILITY LEADS SHALL BE LOCATED AND PROPERLY PLUGGED. UTILITY LEAD WORK SHALL BE COORDINATED WITH THE APPROPRIATE UTILITY COMPANIES.
6. BACKFILL EXCAVATED AREAS WITH CLEAN GRANULAR FILL COMPACTED TO NINETY-FIVE PERCENT (95%) OF THE MATERIAL UNIT WEIGHT BY MODIFIED PROCTOR.
7. AT THE CONCLUSION OF THE DEMOLITION OPERATIONS, THE ENTIRE WORK AREA SHALL BE LEFT IN A CLEAN CONDITION WITH ANY PROTECTIVE DEVICES AND BARRIERS REMOVED. ALL EXPOSED AREAS SHALL BE SUITABLY TOPSOILED, SEEDED AND MULCHED.

811 Know what's below. Call before you dig.

FLEIS & VANDENBRINK
DESIGN. BUILD. OPERATE.
9475 Holly Rd, Suite 201
Grand Blanc, MI 48439
P: 810.743.9120
F: 810.771.7860

REVISION:

SOUTH FLINT TABERNACLE
PART OF THE SE 1/4 OF SECTION 31, T7N-R7E, CITY OF BURTON, MI
PROPOSED CHURCH FACILITY AND BUS PARKING
EXISTING CONDITIONS AND REMOVALS

DESIGN TEAM: LME/DDH
CHECK BY: GLR/BDD/MAR/DDH
DRAWING INFORMATION: 824140_C3.0 EXIST 031816 lisae

MARCH 2016
F&V PROJECT NO. 824140

C3.0

Attachment: 16-17 (2254 : SPR #16-17)

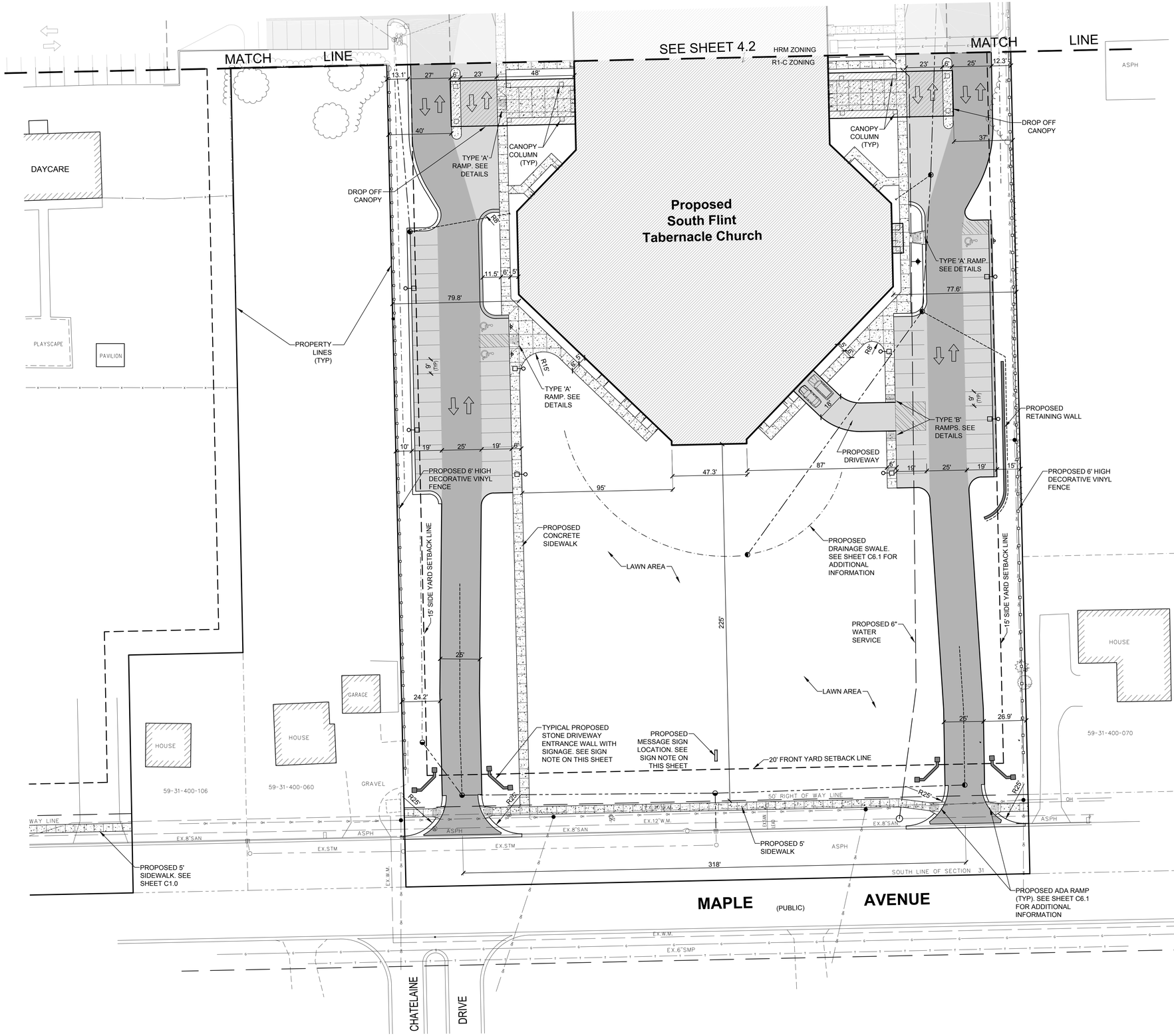

NORTH

0 30 60

SCALE IN FEET

PROPOSED SITE LAYOUT LEGEND

- STANDARD CURB & GUTTER
- MODIFIED CURB & GUTTER
- HMA PAVEMENT - MEDIUM DUTY
- HMA PAVEMENT - HEAVY DUTY
- CONCRETE SIDEWALK
- PAINTED PAVEMENT STRIPING
- BARRIER FREE PAVEMENT MARKING
- SIDEWALK RAMP
- BOLLARDS
- SIGNS
- PARKING LOT LIGHTS
- VINYL FENCE
- CHAIN LINK FENCE
- DRAINAGE SWALE

SIGN NOTE:

THE PROPOSED MESSAGE SIGN AND STONE ENTRY WALL LOCATIONS ARE APPROXIMATE. A COMPREHENSIVE SIGN PACKAGE INCLUDING DETAILS OF THE ENTRY WALLS WILL BE SUBMITTED AT A LATER DATE UPON RECEIVING SITE PLAN APPROVAL.

Know what's below. Call before you dig.

FLEIS&VANDENBRINK
DESIGN. BUILD. OPERATE.
9475 Holly Rd, Suite 201
Grand Blanc, MI 48439
P: 810.743.9120
F: 810.771.7860

REVISION:

SOUTH FLINT TABERNACLE
PART OF THE SE 1/4 OF SECTION 31, T7N-R7E, CITY OF BURTON, MI
PROPOSED CHURCH FACILITY AND BUS PARKING
SITE LAYOUT PLAN - SOUTH

DESIGN TEAM: LME/DDH
CHECK BY: GLR/DDH/MAC/JW 2016
DRAWING INFORMATION: 824140_C4.0 SITE 031716 lisae

MARCH 2016
F&V PROJECT NO. 824140

C4.1

Attachment: 16-17 (2254 : SPR #16-17)

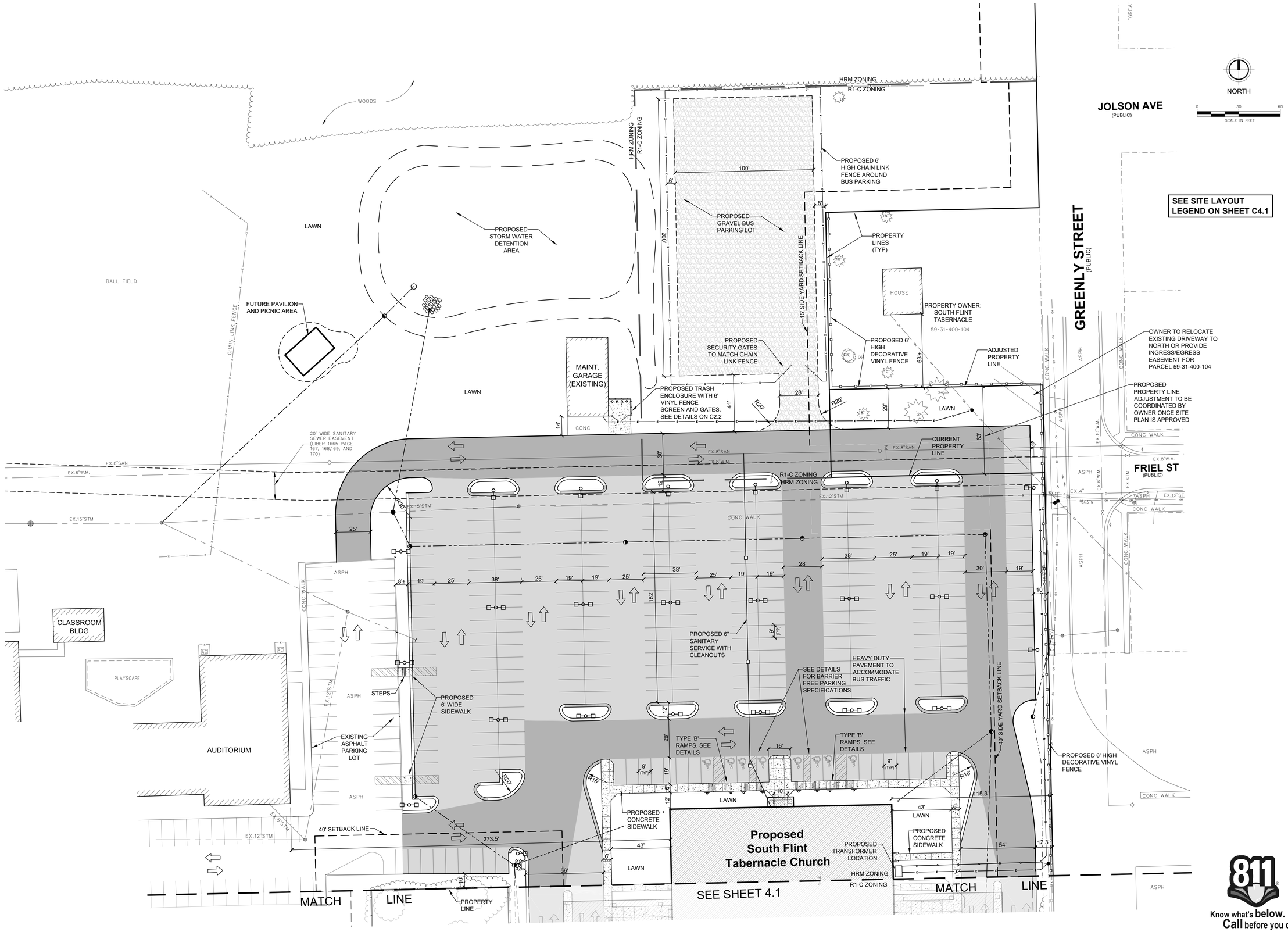

Know what's below. Call before you dig.

FLEIS&VANDENBRINK
DESIGN. BUILD. OPERATE.

9475 Holly Rd, Suite 201
Grand Blanc, MI 48439
P: 810.743.9120
F: 810.771.7860

REVISION:

SOUTH FLINT TABERNACLE
PART OF THE SE 1/4 OF SECTION 31, T7N-R7E, CITY OF BURTON, MI
PROPOSED CHURCH FACILITY AND BUS PARKING

SITE LAYOUT PLAN - NORTH

DESIGN TEAM: LME/DDH
CHECK BY: GLENDON MARCH 2016
DRAWING INFORMATION: 824140_C4.0 SITE 031716 lisae

MARCH 2016
F&V PROJECT NO. 824140

C4.2

Attachment: 16-17 (2254 : SPR #16-17)

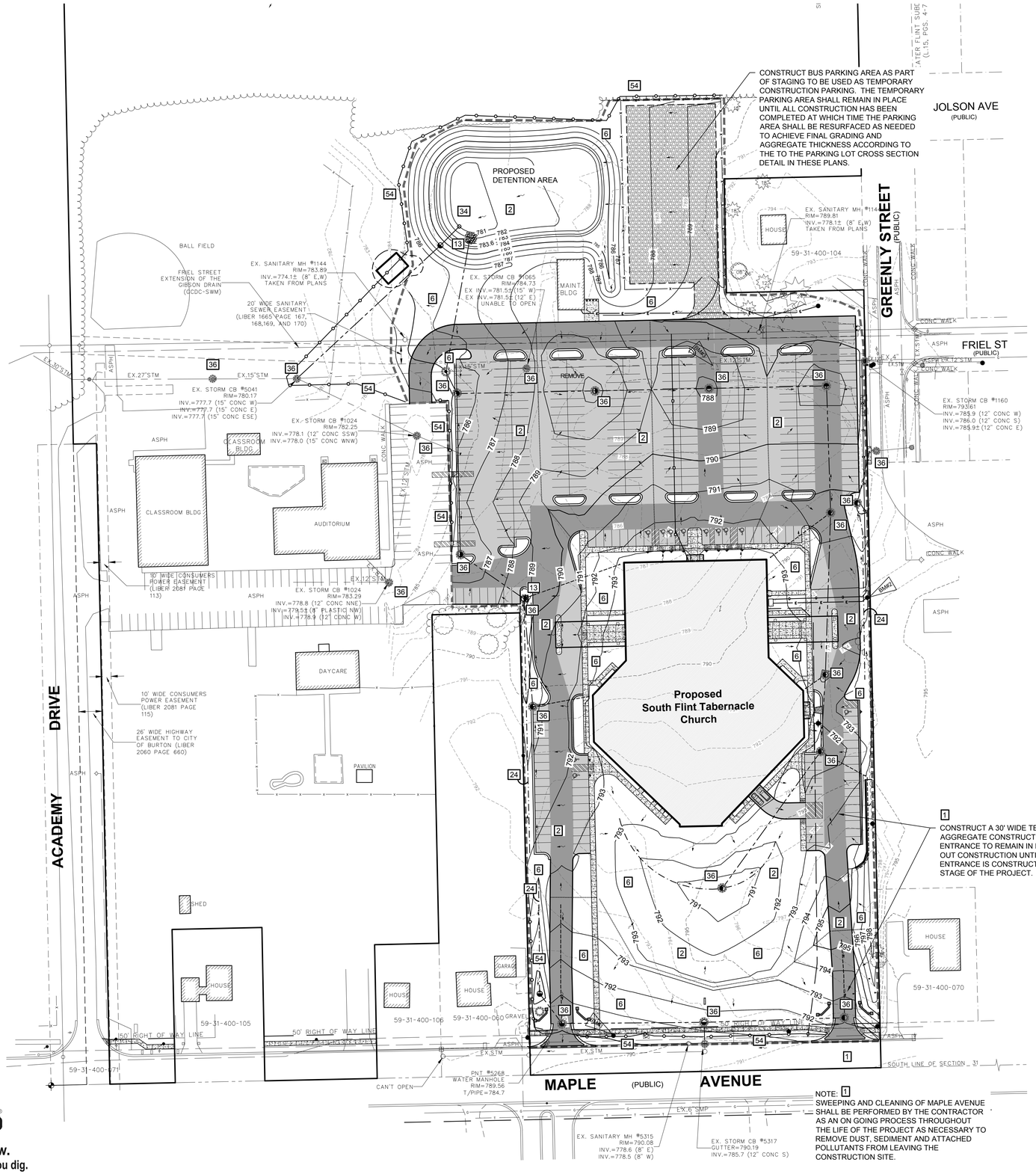

NOTE: [1] SWEEPING AND CLEANING OF MAPLE AVENUE SHALL BE PERFORMED BY THE CONTRACTOR AS AN ON GOING PROCESS THROUGHOUT THE LIFE OF THE PROJECT AS NECESSARY TO REMOVE DUST, SEDIMENT AND ATTACHED POLLUTANTS FROM LEAVING THE CONSTRUCTION SITE.

[1] CONSTRUCT A 30' WIDE TEMPORARY AGGREGATE CONSTRUCTION ENTRANCE. ENTRANCE TO REMAIN IN PLACE THROUGH OUT CONSTRUCTION UNTIL PERMANENT ENTRANCE IS CONSTRUCTED AT THE FINAL STAGE OF THE PROJECT.

SESC NOTES:

1. SEE SOIL EROSION CONTROL NOTES AND UNIFIED KEYING SYSTEM ON ATTACHMENT SHEET OF THESE PLANS.
2. TOTAL PROPERTY BOUNDARY = 24.5± ACRES
   TOTAL DISTURBED AREA = 10.0± ACRES (APPROX. GRADING LIMITS)
3. THE CONTRACTOR IS RESPONSBLE FOR SUBMITTING A SESC PERMIT APPLICATION TO AND OBTAINING A PERMIT FROM THE CITY OF BURTON PRIOR TO THE START OF CONSTRUCTION.
4. THE SOIL EROSION AND SEDIMENTATION CONTROL PERMIT COVERS ONLY THE AREA BOUNDED BY THE PROJECT CUT/FILL LIMITS INCLUDING THE TOPSOIL STOCKPILE AREAS. IF THE CONTRACTOR DISTURBS AREAS OUTSIDE THESE CUT/FILL LIMITS THE CONTRACTOR WILL BE REQUIRED TO EITHER AMEND THE EXISTING SOIL EROSION AND SEDIMENTATION CONTROL PERMIT AND BOND OR ACQUIRE AN ADDITIONAL PERMIT TO COVER THE ADDITIONAL DISTURBED AREAS.
5. AN NPDES - NOTICE OF COVERAGE WILL BE REQUIRED FOR THIS PROJECT. THE CONTRACTOR IS RESPONSIBLE FOR SUBMITTING TO AND OBTAINING THE NOTICE OF COVERAGE FROM THE DEQ.
6. THE PROJECT GRADING LIMITS ARE APPROXIMATELY 1400' EAST OF THE GIBSON DRAIN EXTENSION.
7. AFTER THE PROJECT IS COMPLETED AND ACCEPTED BY AGENCIES, THE OWNER OF THE DRAINAGE SYSTEM IS RESPONSIBLE FOR CLEANING AND MAINTAINING THE DETENTION AREA TO MAINTAIN FUNCTIONALITY OF THE DRAINAGE SYSTEM.

APPLICANT/OWNER

SOUTH FLINT TABERNACLE
1291 EAST MAPLE AVENUE
BURTON, MI 48529
PHONE: 810-743-1710

SOIL EROSION KEY DESCRIPTIONS

1	DUST CONTROL
2	SELECTIVE GRADING AND SHAPING
6	SEEDING AND MULCH
13	RIP RAP
24	GRASSED WATERWAY
34	SEDIMENT BASIN
36	CATCHBASIN INLET PROTECTION
54	GEOTEXTILE SILT FENCE

SESC LEGEND

- CATCHBASIN INLET FILTER
- SILT FENCE
- APPROXIMATE LIMITS OF DISTURBANCE
- CONTOURS (784)
- GRADE BREAKLINE
- STANDARD CURB & GUTTER
- MODIFIED CURB & GUTTER
- HMA PAVEMENT - MEDIUM DUTY
- HMA PAVEMENT - HEAVY DUTY
- CONCRETE SIDEWALK
- CATCHBASIN
- STORM SEWER
- ROOF DRAIN
- PIPE END SECTION
- RIP RAP
- SANITARY CLEANOUT
- SANITARY SERVICE
- WATER SERVICE
- HYDRANT
- SIDEWALK RAMP
- ELECTRIC SERVICE
- GAS SERVICE

BENCHMARKS

BM #1 EL. 791.31
RAILROAD SPIKE IN NORTH FACE OF POWER POLE (NGVD 88)

BM #2 EL. 794.26
RAILROAD SPIKE IN WEST FACE OF POWER POLE (NGVD 88)

BM #3 EL. 790.26
RAILROAD SPIKE IN SOUTH FACE OF POWER POLE (NGVD 88)

LEGAL DESCRIPTION (59-31-400-103)

PART OF THE SOUTHEAST 1/4 OF SECTION 31, T7N-R7E, CITY OF BURTON, GENESEE COUNTY, MICHIGAN, DESCRIBED AS FOLLOWS: BEGINNING AT A POINT ON THE SOUTH LINE OF SECTION 31 WHICH IS N 88°46'30 E 66.00 FEET FROM THE SOUTH 1 /4 CORNER OF SAID SECTION 31; THENCE N 01°12'00 W 718.50 FEET; THENCE S 88°46'30 W 26.00 FEET; THENCE N 01°12'00 W 625.00 FEET; THENCE N 88°43'30 E 890.00 FEET TO THE WEST RIGHT OF WAY LINE OF GREENLY STREET; THENCE S 01°12'00 E, ALONG SAID RIGHT OF WAY LINE, 343.67 FEET; THENCE S 88°43'30 W 153.97 FEET; THENCE S 01°12'00 E 191.13 FEET; THENCE N 88°43'30 E 153.97 FEET, TO SAID WEST RIGHT OF WAY LINE OF GREENLY STREET; THENCE S 01°12'00 E, ALONG SAID RIGHT OF WAY LINE, 290.78 FEET; THENCE S 01°20'10 E 518.50 FEET TO THE SOUTH LINE OF SAID SECTION 31; THENCE S 88°46'30 W, ALONG SAID SOUTH LINE, 393.34 FEET; THENCE N 01°20'10 W 518.50 FEET; THENCE S 88°46'30 W 98.33 FEET; THENCE S 01°11'39 E 368.50 FEET; THENCE S 88°46'30 W 72.09 FEET; THENCE S 01°05'58 E 150.00 FEET TO THE SOUTH LINE OF SAID SECTION 31; THENCE S 88°46'30 W, ALONG SAID SOUTH LINE, 126.00 FEET; THENCE N 01°05'58 W 171.93 FEET; THENCE S 88°46'30 W 100.81 FEET; THENCE S 01°12'00 E 171.93 FEET TO SAID SOUTH LINE; THENCE S 88°46'30 W, ALONG SAID SOUTH LINE, 73.39 FEET TO THE PLACE OF BEGINNING, CONTAINING 24.54± GROSS ACRES OF LAND, MORE OR LESS, AND BEING SUBJECT TO THAT PART NOW USED AS MAPLE AVENUE, SO CALLED, AND ALSO BEING SUBJECT TO ANY RECORDED OR UNRECORDED EASEMENTS OF BENEFIT OR BURDEN.

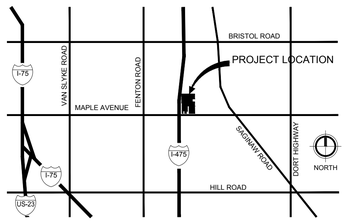

LOCATION MAP

NOT TO SCALE

Know what's below. Call before you dig. 811

FLEIS&VANDENBRINK
DESIGN. BUILD. OPERATE.
9475 Holly Rd, Suite 201
Grand Blanc, MI 48439
P: 810.743.9120
F: 810.771.7860

REVISION:

SOUTH FLINT TABERNACLE
PART OF THE SE 1/4 OF SECTION 31, T7N-R7E, CITY OF BURTON, MI
PROPOSED CHURCH FACILITY AND BUS PARKING
SOIL EROSION & SEDIMENTATION CONTROL PLAN

DESIGN TEAM: LME/DDH
CHECK BY: GLR/RDD/MAR/DJV
DRAWING INFORMATION: 824140_C5.0 SESC 031716 lisae

MARCH 2016
F&V PROJECT NO. 824140

C5.0

Attachment: 16-17 (2254 : SPR #16-17)

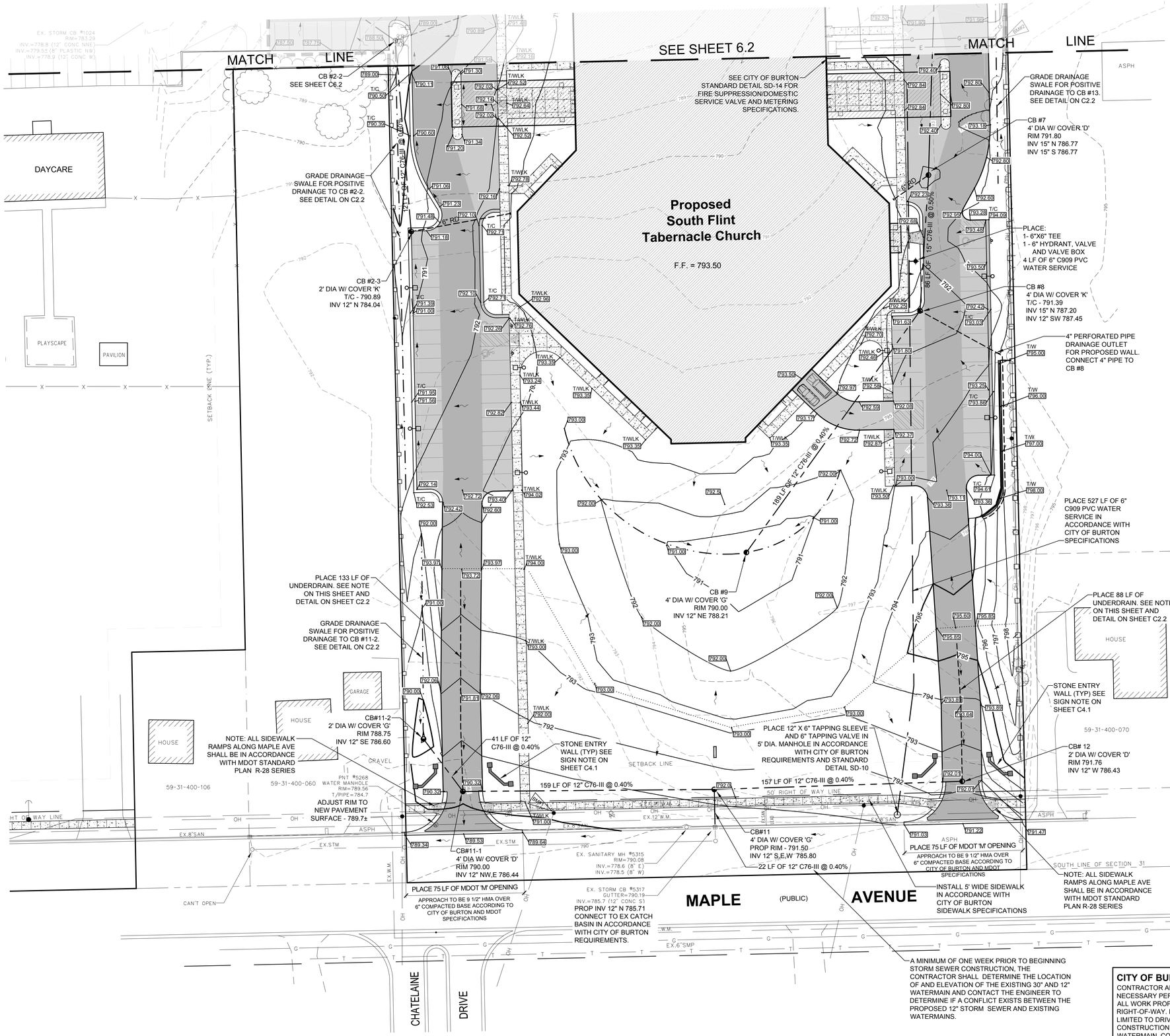

NORTH

0 30 60

SCALE IN FEET

PROPOSED GRADING & UTILITY LEGEND

- 759.65 — PAVEMENT OR GRADE ELEV
- T/C 759.65 — TOP OF CURB ELEV
- T/WLK 759.65 — TOP OF WALK ELEV
- T/W 759.65 — TOP OF RETAINING WALL ELEV
- 784 — CONTOURS
- GRADE BREAKLINE
- STANDARD CURB & GUTTER
- MODIFIED CURB & GUTTER
- HMA PAVEMENT - MEDIUM DUTY
- HMA PAVEMENT - HEAVY DUTY
- CONCRETE SIDEWALK
- CATCHBASIN
- STORM SEWER
- ROOF DRAIN
- PIPE END SECTION
- RIP RAP
- SANITARY CLEANOUT
- SANITARY SERVICE
- WATER SERVICE
- HYDRANT
- SIDEWALK RAMP
- E — ELECTRIC SERVICE
- G — GAS SERVICE
- SURFACE FLOW ARROWS
- BOLLARDS
- SIGNS
- PARKING LOT LIGHTS
- PAINTED PAVEMENT STRIPING
- VINYL FENCE
- X — CHAIN LINK FENCE

COMPACTED SAND BACKFILL NOTE:

ALL PROPOSED UTILITIES, WHEN PLACED UNDER OR WITHIN 5' OF PAVEMENT, SHALL BE BACKFILLED WITH COMPACTED SAND (MDOT GRANULAR, CL II). ALL SAND BACKFILL SHALL BE COMPACTED TO 95% DENSITY (MODIFIED PROCTOR). THE CONTRACTOR SHALL PROVIDE SUFFICIENT SOIL COMPACTION TESTS FOR THE CONSTRUCTION ENGINEER TO DETERMINE COMPLIANCE WITH THE REQUIRED DESIGN DENSITY OF 95% (MODIFIED PROCTOR). TESTS SHALL BE PERFORMED BY AN INDEPENDENT TESTING SERVICE AND ALL FEES PAID BY THE CONTRACTOR.

UTILITY NOTE:

ALL PROPOSED TELEPHONE, CABLE TV, ELECTRIC AND GAS SERVICES ARE TO BE PLACED UNDERGROUND. THE LOCATION, SIZE AND PLACEMENT SHALL BE COORDINATED BETWEEN THE CONTRACTOR AND UTILITY OWNERS.

UNDER DRAIN NOTE:

ALL PROPOSED STORM SEWER INLET STRUCTURES WITHIN CURB AND GUTTER AND PAVED AREAS SHALL HAVE UNDERDRAINS EXTENDING 20' OUT FROM THE STRUCTURE IN MULTIPLE DIRECTIONS ACCORDING TO THE DETAIL ON SHEET C2.2.

CITY OF BURTON PERMIT NOTE:

CONTRACTOR AND/OR OWNER SHALL OBTAIN ALL NECESSARY PERMITS FROM THE CITY OF BURTON FOR ALL WORK PROPOSED WITHIN MAPLE AVENUE RIGHT-OF-WAY. PERMITS MAY INCLUDE BUT ARE NOT LIMITED TO DRIVEWAY CONSTRUCTION, SIDEWALK CONSTRUCTION, CONNECTION TO EXISTING WATERMAIN, CONNECTION TO EXISTING STORM SEWER, GRADING ETC.

Know what's below. Call before you dig.

FLEIS&VANDENBRINK
DESIGN. BUILD. OPERATE.
9475 Holly Rd, Suite 201
Grand Blanc, MI 48439
P: 810.743.9120
F: 810.771.7860

REVISION:

SOUTH FLINT TABERNACLE
PART OF THE SE 1/4 OF SECTION 31, T7N-R7E, CITY OF BURTON, MI
PROPOSED CHURCH FACILITY AND BUS PARKING
GRADING AND UTILITY PLAN - SOUTH

DESIGN TEAM: LME/DDH
CHECK BY: GLR/DDH 3/17/ 2016
DRAWING INFORMATION: 824140_C6.0 GRADE 031816 lisae

MARCH 2016
F&V PROJECT NO. 824140

C6.1

Attachment: 16-17 (2254 : SPR #16-17)

NORTH

SCALE IN FEET 0 30 60

JOLSON AVE (PUBLIC)

GREENLY STREET (PUBLIC)

FRIEL ST (PUBLIC)

WOODS

BALL FIELD

CHAIN LINK FENCE

CLASSROOM BLDG

AUDITORIUM

PLAYSCAPE

HOUSE

MAINT. GARAGE (EXISTING)

ASPH

CONC WALK

OH

UTILITY CROSSING
TOP OF EX. 8" WM - 780.3±
BTM OUTSIDE OF PROPOSED 30" - 780.55±
CLEARANCE - 3"±
CONTRACTOR SHALL PLACE A CONCRETE CRADLE AROUND EXISTING WATERMAIN UP TO PROPOSED STORM SEWER IN ACCORDANCE WITH CITY OF BURTON REQUIREMENTS

OUTLET STRUCTURE #10
4' DIA W/ 5 -1" DIA. RESTRICTOR HOLES.
SEE OUTLET STRUCTURE DETAIL ON SHEET C2.2
INV 15" SW 780.20

30 LF OF 15" PVC SDR-26 @ 1.00%

CB #10-A
(OVERFLOW STRUCTURE)
4' DIA W/ COVER 'E'
PROP RIM 786.0
INV 15" SW 779.86
INV 15" NE 779.90

SLOPE BOTTOM OF DETENTION AREA @ 1.60%

MH #1
6' DIA. W/ COVER 'B'
RIM 786.00
INV 30" N 781.01
INV 30" SE 781.01
EX. INV 15" E,W 780.15±
NOTE: PROPOSED STORM SEWER CROSSING. CONSTRUCT STRUCTURE AROUND EXISTING 15" PIPE. SEE DETAIL ON SHEET C2.2

REPLACE CHAIN LINE FENCE AND ANY REMOVED POSTS ONCE STORM SEWER IS PLACED

220 LF OF 15" PVC SDR-26 @ 1.00%

20' WIDE SANITARY SEWER EASEMENT (LIBER 1665 PAGE 167, 168,169, AND 170)

EX. SANITARY MH #1144
RIM=783.89
INV.=774.1± (8" E,W)
TAKEN FROM PLANS

RECONSTRUCT EXISTING SANITARY SEWER MANHOLE COVER IN ACCORDANCE WITH CITY OF BURTON REQUIREMENTS AND SANITARY SEWER DETAILS SD-5 AND SD-6
PROP. RIM EL 784.6±

EX. STORM CB #5041
RIM=780.17
INV.=777.7 (15" CONC W)
INV.=777.7 (15" CONC E)
INV.=777.7 (15" CONC ESE)
PROP 15" NE 777.66

UTILITY CROSSING
TOP OF EX. 6" WM - 776.5±
BTM OUTSIDE OF PROPOSED 15" - 778.1±
CLEARANCE - 19"±

EX. STORM CB #1024
RIM=782.25
INV.=778.1 (12" CONC SSW)
INV.=778.0 (15" CONC WNW)

CONNECT TO EX. CATCH BASIN IN ACCORDANCE WITH GCDC-SWM REQUIREMENTS. CONTRACTOR AND/OR OWNER SHALL OBTAIN A PERMIT FROM THE GCDC-SWM FOR THIS CONNECTION AND THE PROPOSED STORM SEWER CROSSING AT MH#1

EX. STORM CB #1065
RIM=784.73
EX INV.=781.5± (15" W)
EX INV.=781.5± (12" E)
UNABLE TO OPEN
RECONSTRUCT / PLACE MDOT COVER 'B'
RIM 787.68

147 LF OF 30" C76-III @ 0.35%

PLACE:
36" STEEL END SECTION WITH 10 SYD OF PLAIN RIPRAP
INV. 30" S 780.50

PLACE:
CONCRETE PAD IN ACCORDANCE WITH TRASH ENCLOSURE DETAILS ON SHEET C2.2

CONNECT TO EXISTING SANITARY SEWER PER CITY OF BURTON REQUIREMENTS AND SANITARY SEWER DETAIL SD-3

RECONSTRUCT EXISTING SANITARY SEWER MANHOLE COVER TO BE FLUSH WITH PROPOSED PAVEMENT IN ACCORDANCE WITH CITY OF BURTON REQUIREMENTS ANDSANITARY SEWER DETAILS SD-5 AND SD-6
PROP. RIM EL 790.5±

ADJUST EXISTING VALVE COVER TO BE FLUSH WITH PROPOSED PAVEMENT
SS 31-400-104

EX. SANITARY MH #1144
RIM=789.81
INV.=778.1± (8" E,W)
TAKEN FROM PLANS

PLACE:
2 - PROTECTIVE BOLLARDS BETWEEN PAVEMENT AND HYDRANT. SEE BOLLARD DETAIL ON SHEET C2.2

SEE BUS PARKING LOT AGGREGATE CROSS SECTION DETAIL ON C2.1

27 LF OF 30" C76-III @ 0.30%

155 LF OF 24" C76-III @ 0.40%

128 LF OF 21" C76-III @ 0.60%

132 LF OF 18" C76-III @ 0.80%

75' (TYP)

CB #3
4' DIA W/ COVER 'D'
RIM 786.68
INV 24" W 781.71
INV 21" E 781.96

CB #4
4' DIA W/ COVER 'D'
RIM 787.70
INV 21" W 782.73
INV 18" E 782.98

CB #5
4' DIA W/ COVER 'D'
RIM 788.25
INV 18" S 784.04
INV 18" W 784.04

CB #2
6' DIA W/ COVER 'K'
T/C 785.64
INV 30" NW 781.09
INV 24" E 781.09
INV 15" S 781.09

PLACE:
6" CLEANOUT (TYP) @ 75' SPACING (MAX. 90' ALLOWED). SEE DETAIL ON SHEET C2.2

PLACE:
263 LF OF 6" SDR-26 SANITARY SEWER SERVICE LEAD @ MIN. 1.0% SLOPE IN ACCORDANCE WITH CITY OF BURTON REQUIREMENTS AND STANDARD DETAIL SD-3

180 LF OF 15" C76-III @ 0.80%

89 LF OF 15" C76-III @ 0.60%

142 LF OF 18" C76-III @ 0.60%

181 LF OF 15" C76-III @ 0.90%

61 LF OF 12" C76-III @ 0.40%

EX. STORM CB #1160
RIM=793.61
INV.=785.9 (12" CONC W)
INV.=786.0 (12" CONC S)
INV.=785.9± (12" CONC E)

EX. STORM CB #1162
RIM=791.80
INV.=787.2± (12" CONC N,W)

PROP INV 12" SW 787.26
CONNECT TO EXISTING CATCH BASIN IN ACCORDANCE WITH CITY OF BURTON REQUIREMENTS

REMOVE AND REPLACE EXISTING SIDEWALK

CB #13
2' DIA W/ COVER 'G'
RIM 789.90
INV 12" NE 787.50

CB #6
4' DIA W/ COVER 'D'
RIM 790.20
INV 18" N 784.89
INV 15" S 785.14

APPROXIMATE LOCATION OF GAS SERVICE.
FINAL LOCATION AND SIZE TO BE COORDINATED BETWEEN CONTRACTOR AND CONSUMERS ENERGY COMPANY

CB #2-1
4' DIA W/ COVER 'K'
T/C - 786.53
INV 15" N 782.53
INV 15" SE 782.53

CB #2-2
4' DIA W/ COVER 'G'
RIM 788.00
INV 15" NW 783.06
INV 12" S 783.31

PLACE:
CONCRETE SPILLWAY PER DETAIL ON C2.1 WITH
3 SYD PLAIN RIP-RAP

Proposed
South Flint
Tabernacle Church
F.F. = 793.50

SS INV - 783.5±

6" RD

SEE SHEET 6.1

MATCH LINE

MATCH LINE

APPROXIMATE LOCATION OF ELECTRIC SERVICE AND TRANSFORMER. FINAL LOCATION TO BE COORDINATED BETWEEN CONTRACTOR AND CONSUMERS ENERGY COMPANY

SEE GRADING AND UTILITY LEGEND ON SHEET C6.1

COMPACTED SAND BACKFILL NOTE:
ALL PROPOSED UTILITIES, WHEN PLACED UNDER OR WITHIN 5' OF PAVEMENT, SHALL BE BACKFILLED WITH COMPACTED SAND (MDOT GRANULAR, CL II). ALL SAND BACKFILL SHALL BE COMPACTED TO 95% DENSITY (MODIFIED PROCTOR). THE CONTRACTOR SHALL PROVIDE SUFFICIENT SOIL COMPACTION TESTS FOR THE CONSTRUCTION ENGINEER TO DETERMINE COMPLIANCE WITH THE REQUIRED DESIGN DENSITY OF 95% (MODIFIED PROCTOR). TESTS SHALL BE PERFORMED BY AN INDEPENDENT TESTING SERVICE AND ALL FEES PAID BY THE CONTRACTOR.

UTILITY NOTE:
ALL PROPOSED TELEPHONE, CABLE TV, ELECTRIC AND GAS SERVICES ARE TO BE PLACED UNDERGROUND. THE LOCATION, SIZE AND PLACEMENT SHALL BE COORDINATED BETWEEN THE CONTRACTOR AND UTILITY OWNERS.

UNDER DRAIN NOTE:
ALL PROPOSED STORM SEWER INLET STRUCTURES WITHIN CURB AND GUTTER AND PAVED AREAS SHALL HAVE UNDERDRAINS EXTENDING 20' OUT FROM THE STRUCTURE IN MULTIPLE DIRECTIONS ACCORDING TO THE DETAIL ON SHEET C2.2.

CITY OF BURTON PERMIT NOTE:
CONTRACTOR AND/OR OWNER SHALL OBTAIN ALL NECESSARY PERMITS FROM THE CITY OF BURTON FOR ALL WORK PROPOSED WITHIN GREENLEY STREET RIGHT-OF-WAY. PERMITS MAY INCLUDE BUT ARE NOT LIMITED TO DRIVEWAY CONSTRUCTION, SIDEWALK CONSTRUCTION, CONNECTION TO EXISTING WATERMAIN, CONNECTION TO EXISTING STORM SEWER, GRADING ETC.

Know what's below. Call before you dig.

FLEIS&VANDENBRINK
DESIGN. BUILD. OPERATE.
9475 Holly Rd, Suite 201
Grand Blanc, MI 48439
P: 810.743.9120
F: 810.771.7860

REVISION:

SOUTH FLINT TABERNACLE CHURCH
PART OF THE SE 1/4 OF SECTION 31, T7N-R7E, CITY OF BURTON, MI
PROPOSED CHURCH FACILITY AND BUS PARKING
GRADING AND UTILITY PLAN - NORTH

DESIGN TEAM: LME/DDH
CHECK BY: GLR/DDH/MARCH 2016
DRAWING INFORMATION: 824140_C6.0 GRADE 031816 lisae

MARCH 2016
F&V PROJECT NO. 824140

C6.2

Attachment: 16-17 (2254 : SPR #16-17)

LEGEND

- DRAINAGE AREA TO DETENTION AREA
- DRAINAGE AREA TO CATCH BASIN
- EX DRAINAGE AREA TO MAPLE ROAD
- PROPOSED DRAINAGE AREA TO MAPLE ROAD

NOTE:
1. SEE STORMWATER MANAGEMENT PLAN SUMMARY, STORM SEWER SIZING CALCULATIONS AND DETENTION AREA SIZING CALCULATIONS SUBMITTED WITH SITE PLAN PACKAGE.
2. SEE SHEET C6.1 AND C6.2 FOR STORM SEWER SIZES AND INVERTS.
3. SEE SHEET C2.2 FOR VARIOUS STORM DRAINAGE SYSTEM DETAILS.

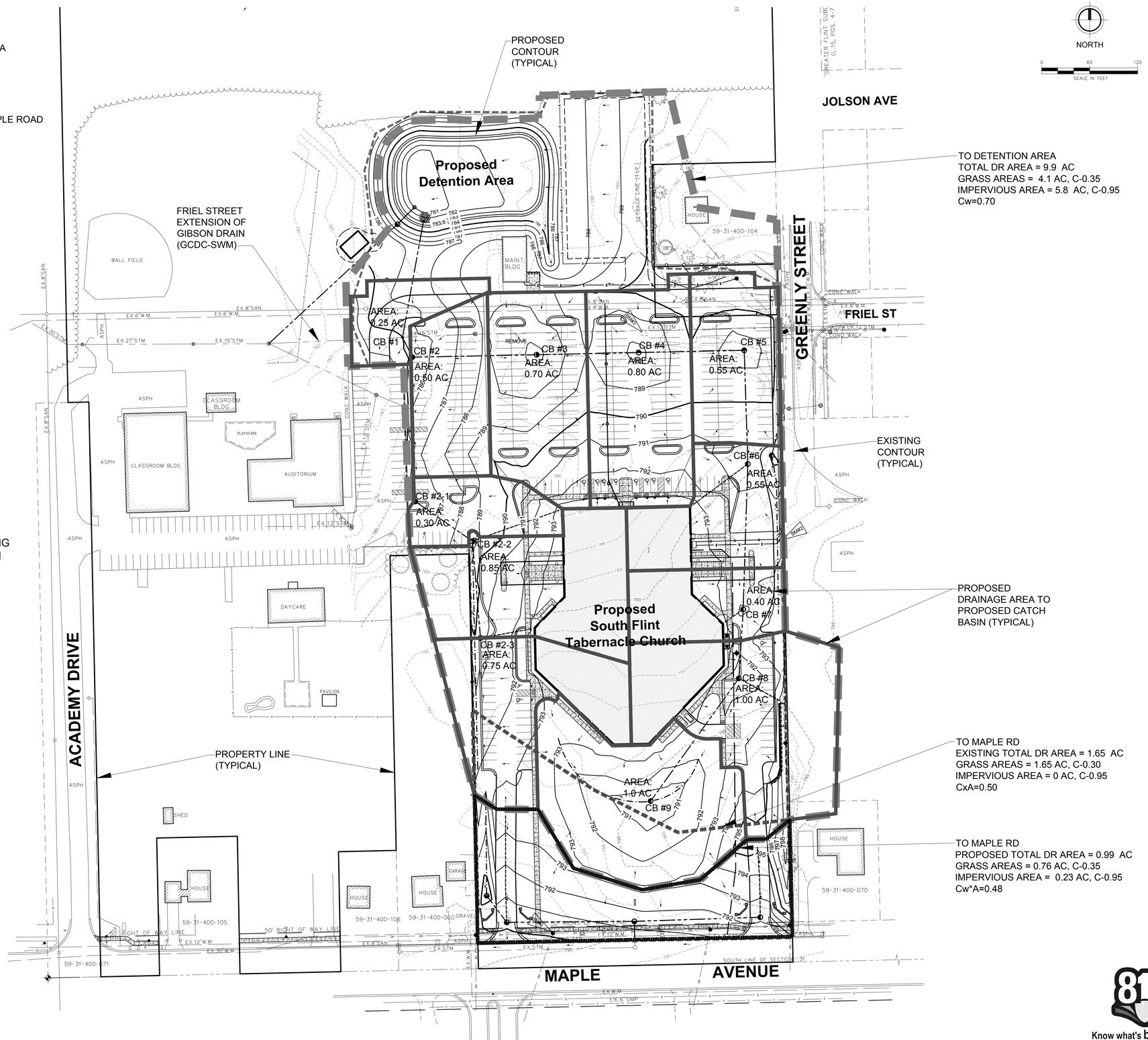

Know what's below. Call before you dig.

FLEIS&VANDENBRINK
DESIGN. BUILD. OPERATE.
9475 Holly Rd, Suite 201
Grand Blanc, MI 48439
P: 810.743.9120
F: 810.771.7860

REVISION:

SOUTH FLINT TABERNACLE
PART OF THE SE 1/4 OF SECTION 31, T7N-R7E, CITY OF BURTON, MI
PROPOSED CHURCH FACILITY AND BUS PARKING
STORM WATER MANAGEMENT PLAN

DESIGN TEAM: LME/DDH
CHECK BY: GLR/DDH/MAC/LW 3/16
DRAWING INFORMATION: 824140_C7.0 SWMP 031716 lisae

MARCH 2016
F&V PROJECT NO. 824140

C7.0

Attachment: 16-17 (2254 : SPR #16-17)

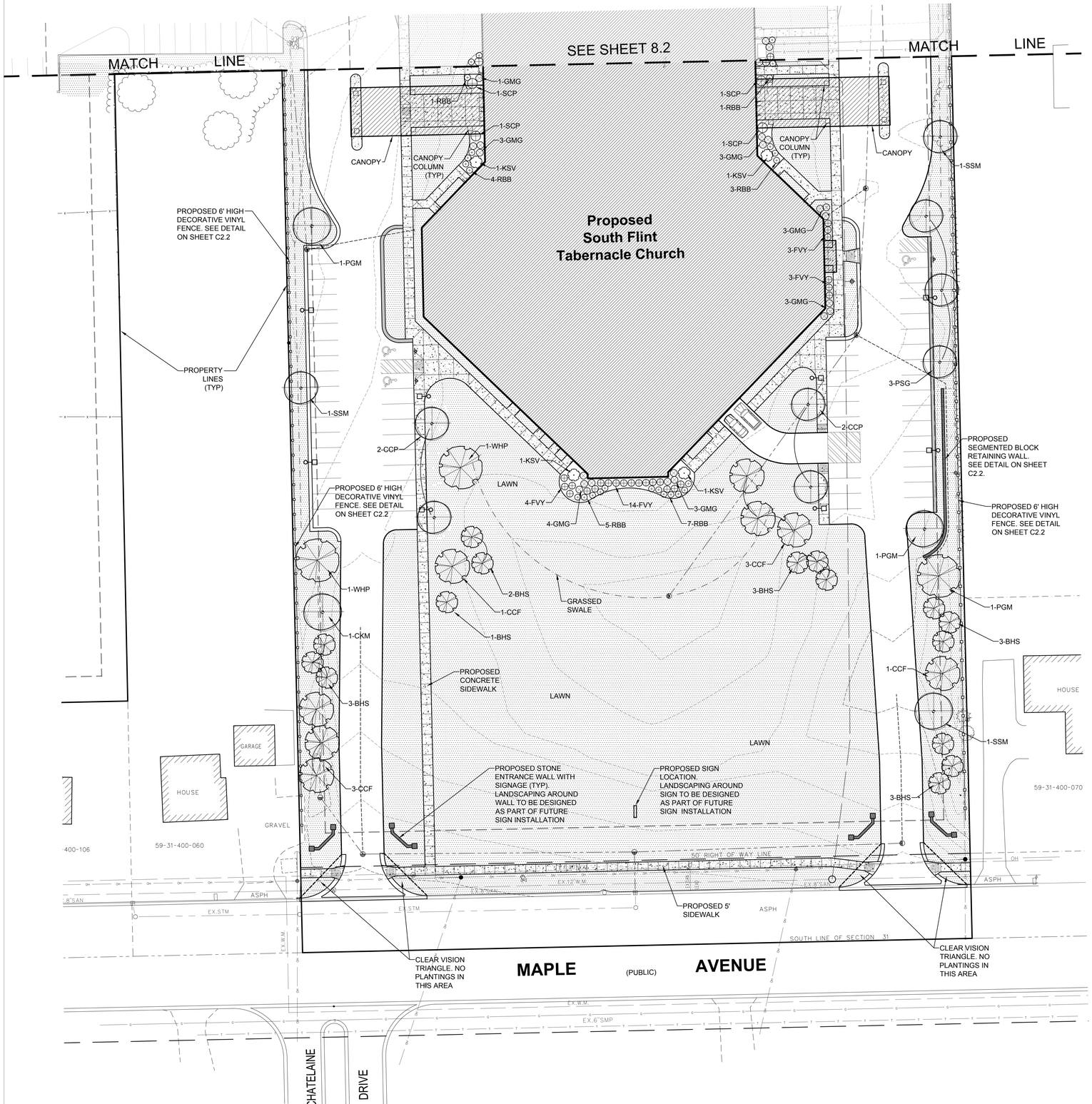

NORTH

0 30 60
SCALE IN FEET

PROPOSED SITE LAYOUT LEGEND

- STANDARD CURB & GUTTER
- MODIFIED CURB & GUTTER
- CONCRETE SIDEWALK
- PAINTED PAVEMENT STRIPING
- BARRIER FREE PAVEMENT MARKING
- SIDEWALK RAMP
- BOLLARDS
- SIGNS
- PARKING LOT LIGHTS
- VINYL FENCE
- CHAIN LINK FENCE
- DRAINAGE SWALE

PROPOSED LANDSCAPE LEGEND

	KEY	COMMON NAME	BOTANICAL NAME	MIN. SIZE	APPROX. QTY
GRASSES	HFG	Hameln Dwarf Fountain Grass	Pennisetum alopecuroides 'Hameln'	#1pot	10
	GMG	Gracillimus Maiden Grass	Miscanthus sinensis Gracillimus	#2pot	17
SHRUBS	SCP	Siberian Cypress	Microbiota decussata	#3pot	4
	FVY	Fairview Yew	Taxus x media 'Fairview'	18"ht	51
	KSV	Koreanspice Viburnum	Viburnum carlesii	#7pot	12
	RBB	Royal Burgundy Barberry	Berberis thunbergii 'Gentry' PP9461	#3pot	31
TREES	CKM	Crimson King Maple	Acer platanoides 'Crimson King'	2.5"cal	3
	PSG	Princeton Sentry Ginkgo	Ginkgo biloba 'Princeton Sentry'	2.5" cal	7
	CCP	Chanticleer Callery Pear	Pyrus calleryana 'Chanticlee	2.5"cal	11
	SSM	Steeple Sugar Maple	Acer saccharum 'Steeple'	2.5"cal	10
	PGM	Princeton Gold Maple	Acer platanoides 'Princeton Gold'	2.5"cal	2
	WHP	White Pine	Pinus strobus	8' ht	4
	BHS	Black Hills White Spruce	Picea glauca densata	8' ht	17
	CCF	Concolor Fir	Abies concolor	8' ht	14
MISC.		LAWN AREAS			
		MULCHED ISLAND - 2" COBBLE STONE OVER WEED BARRIER FABRIC (TOP OF STONE SET FLUSH WITH TOP OF CURB)			
		ALUM. LANDSCAPE EDGER			

LANDSCAPE NOTES

1) ALL LAWN AREAS ARE TO BE SEEDED. ALL PLANTINGS AND PLANTING BEDS ARE TO RECEIVE AN APPLICATION OF PRE-EMERGENT HERBICIDE AND A 4" LAYER OF HARDWOOD MULCH (UNLESS NOTED OTHERWISE ON PLAN).

2) ALL LANDSCAPED AREAS SHALL BE IRRIGATED BY AN AUTOMATIC UNDERGROUND IRRIGATION SYSTEM WITH LAWN AND LANDSCAPE BEDS IN SEPARATE IRRIGATION ZONES TO MINIMIZE OVER WATERING. ALL PLANTINGS SHALL RECEIVE A MINIMUM OF 1" OF WATER PER WEEK UNTIL HEALTHY GROWTH HAS BEEN ESTABLISHED.

3) PLANT MATERIALS, QUANTITIES, AND LOCATIONS HAVE BEEN FIGURED AS CLOSELY AS POSSIBLE. HOWEVER, MATERIALS, QUANTITIES, AND LOCATIONS MAY BE ADJUSTED ON SITE IF NECESSARY. IT REMAINS THE RESPONSIBILITY OF THE LANDSCAPE CONTRACTOR TO COMPLETE THE PROJECT AS INTENDED PER THIS PLAN.

4) THE LANDSCAPE CONTRACTOR SHALL ASSUME MAINTENANCE RESPONSIBILITY FOR A MINIMUM OF ONE YEAR FOR ALL LANDSCAPE MATERIALS ONCE INSTALLED.

5) ALL LANDSCAPED AREAS SHALL BE KEPT FREE OF REFUSE AND DEBRIS AND KEPT IN A HEALTHY GROWING CONDITION.

6) SELECTION AND INSTALLATION OF PLANT MATERIAL INCLUDING SITE PREPARATION, PLANTING, PRUNING, WATERING AND CULTIVATING SHALL BE IN ACCORDANCE WITH THE AMERICAN ASSOCIATION OF NURSERYMEN STANDARDS.

Know what's **below.**
Call before you dig.

FLEIS&VANDENBRINK
DESIGN. BUILD. OPERATE.
9475 Holly Rd, Suite 201
Grand Blanc, MI 48439
P: 810.743.9120
F: 810.771.7860

REVISION:

SOUTH FLINT TABERNACLE
PART OF THE SE 1/4 OF SECTION 31, T7N-R7E, CITY OF BURTON, MI
PROPOSED CHURCH FACILITY AND BUS PARKING

LANDSCAPE PLAN - SOUTH

DESIGN TEAM: LME/DDH
CHECK BY: GLR/DDH 3/17/ 2016
DRAWING INFORMATION: 824140_C8.0 LANDS 031716 lisas

MARCH 2016
F&V PROJECT NO. 824140

C8.1

Attachment: 16-17 (2254 : SPR #16-17)

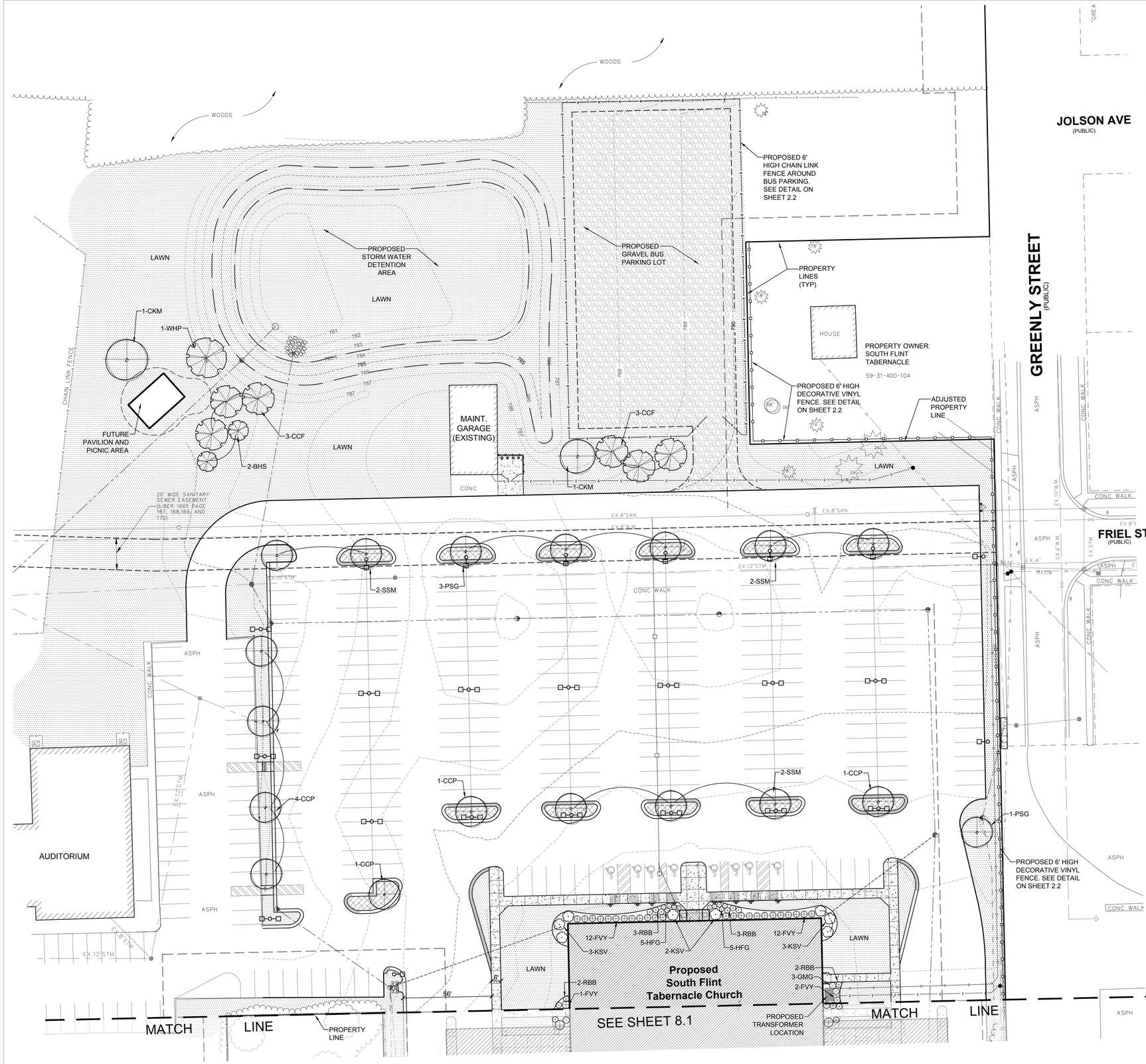

SEE LANDSCAPE LEGEND ON SHEET C8.1

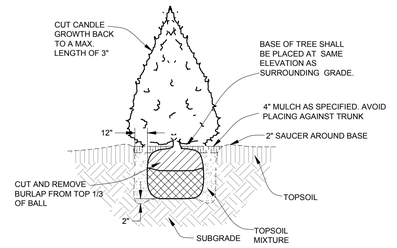

EVERGREEN TREE PLANTING DETAIL

NOT TO SCALE

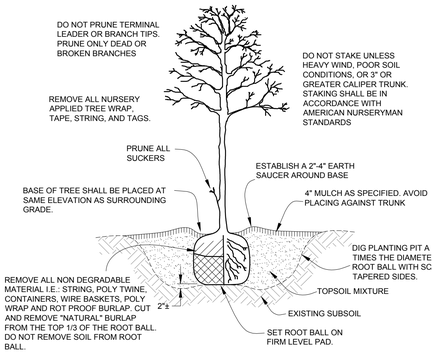

DECIDUOUS TREE PLANTING DETAIL

NOT TO SCALE

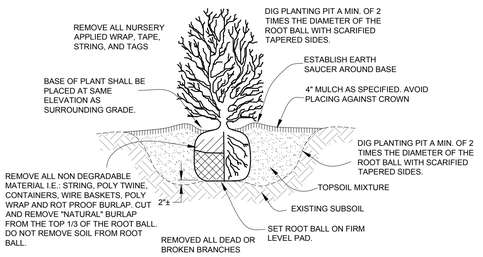

SHRUB PLANTING DETAIL

NOT TO SCALE

811 Know what's below. Call before you dig.

FLEIS&VANDENBRINK
DESIGN. BUILD. OPERATE.
9475 Holly Rd, Suite 201
Grand Blanc, MI 48439
P: 810.743.9120
F: 810.771.7860

REVISION:

SOUTH FLINT TABERNACLE
PART OF THE SE 1/4 OF SECTION 31, T7N-R7E, CITY OF BURTON, MI
PROPOSED CHURCH FACILITY AND BUS PARKING

LANDSCAPE PLAN - NORTH

DESIGN TEAM: LME/DDH
CHECK BY: GLR/DDH
DRAWING INFORMATION: 824140_C8.0 LANDS 031716 lisae

MARCH 2016

F&V PROJECT NO. 824140

C8.2

Attachment: 16-17 (2254 : SPR #16-17)

GENERAL CONSTRUCTION NOTES

1. STANDARD SPECIFICATIONS & DETAILS
ALL CONSTRUCTION AND MATERIALS SHALL CONFORM TO THE LATEST GENESEE COUNTY / CITY OF BURTON STANDARD SPECIFICATIONS AND STANDARD DETAILS FOR SANITARY SEWER, PRESSURE PIPE, AND PUMP STATION CONSTRUCTION. ANY DEVIATIONS FROM THE CITY OF BURTON APPROVED PLANS WILL NOT BE PERMITTED. <u>IF IT BECOMES NECESSARY TO REVISE PLANS THEY SHALL BE RESUBMITTED TO THE CITY OF BURTON FOR APPROVAL.</u>

2. PRE-CONSTRUCTION MEETING
A PRE-CONSTRUCTION MEETING SHALL BE HELD AT THE CITY OF BURTON OFFICE. NO PRE-CONSTRUCTION MEETING SHALL BE HELD PRIOR TO OBTAINING THE STATE CONSTRUCTION PERMIT. THE MEETING TIME, PLACE, AND ATTENDEES SHALL BE ARRANGED BY THE DESIGN ENGINEER FOR THE PROJECT. GCDC-WWS, GCDC-SWM, THE MUNICIPALITY, AGENCY HAVING AUTHORITY OVER THE ROADWAYS, PROJECT OWNER, CONTRACTOR, AND ANY AFFECTED UTILITIES, SHALL BE INVITED, AS A MINIMUM, TO THE PRE-CONSTRUCTION MEETING.

3. MISS DIG UTILITY ALERT
THREE (3) WORKING DAYS PRIOR TO BEGINNING CONSTRUCTION, IT SHALL BE THE CONTRACTOR'S RESPONSIBILITY TO CONTACT MISS DIG UTILITY PROTECTION SERVICE (1-800-482-7171) TO VERIFY THE LOCATION OF ALL EXISTING UTILITIES. THE CONTRACTOR SHALL ASSUME RESPONSIBILITY FOR THE PROTECTION OF ALL EXISTING UTILITIES DURING CONSTRUCTION. ALL UTILITIES DAMAGED DURING CONSTRUCTION SHALL BE REPAIRED IN ACCORDANCE WITH THE UTILITY OWNERS REQUIREMENTS.

4. FIELD LOCATION OF UTILITIES
PRIOR TO BEGINNING CONSTRUCTION, THE CONTRACTOR SHALL BE REQUIRED TO EXPOSE ALL EXISTING UTILITIES THAT CROSS THE PROPOSED CONSTRUCTION SO THE DESIGN ENGINEER MAY DETERMINE IF A VERTICAL CONFLICT EXISTS BETWEEN THE EXISTING UTILITY AND THE PROPOSED CONSTRUCTION. ALL LABOR REQUIRED TO UNCOVER THE EXISTING UTILITY SHALL BE CONSIDERED INCLUDED IN THE LINEAL FEET OF PRESSURE PIPE OR SANITARY SEWER INSTALLED. THE CONTRACTOR SHALL VERIFY THE DEPTH AND HORIZONTAL LOCATIONS OF ALL UTILITIES IN SUFFICIENT TIME SUCH THAT ANY CONFLICTS CAN BE RESOLVED BEFORE WORK IS STARTED IN THAT PORTION OF THE PROJECT. THE CONTRACTOR SHALL ARRANGE FOR THE VARIOUS UTILITY OWNERS TO LOCATE, REMOVE AND REPLACE, OR RELOCATE THEIR FACILITIES. ALL COST FOR THIS SHALL BE INCLUSIVE TO THE PROJECT.

5. SUBSURFACE SOIL CONDITIONS
PRIOR TO BIDDING THE CONTRACTOR AND SUBCONTRACTORS SHALL MAKE A PERSONAL INVESTIGATION OF THE SITE AND EXISTING SURFACE AND SUBSURFACE CONDITIONS. THE CONTRACTOR IS RESPONSIBLE TO ACQUAINT THEMSELVES WITH CONDITIONS OF THE WORK AREA. THE CONTRACTOR IS ADVISED TO DETERMINE THE SUBSURFACE SOIL AND GROUND WATER CONDITIONS. DEWATERING, IF DETERMINED NECESSARY BY THE CONTRACTOR AND IF NOT SPECIFICALLY CALLED OUT IN THE CONTRACT DOCUMENTS, WILL BE INCIDENTAL TO THE COST OF INSTALLATION.

6. PERMITS AND FEES
THE CONTRACTOR/DEVELOPER SHALL OBTAIN ALL PERMITS, INCLUDING THE PAYMENT OF ANY FEES OR BONDS, REQUIRED BY ANY FEDERAL, STATE, COUNTY, LOCAL, OR PRIVATE ORGANIZATIONS, PRIOR TO ISSUANCE OF THE S-PERMIT AND COMMENCING CONSTRUCTION.

7. GCDC-WWS INSPECTION FEES
THE DEVELOPER SHALL PAY FOR ALL SANITARY SEWER AND PRESSURE PIPE INSPECTION FEES AND WATER USAGE FEES PRIOR TO APPROVAL OF THE PLANS AND THE ISSUANCE OF THE S-PERMIT.

8. SOIL EROSION CONTROL, PART 91 OF P.A. 451 OF 1994
THE CONTRACTOR/DEVELOPER SHALL COMPLY WITH ALL PROVISIONS OF PART 91, ACT 451 OF P.A. 1994, FOR SOIL EROSION AND SEDIMENTATION CONTROL, AND WILL BE RESPONSIBLE FOR ALL MAINTENANCE UNTIL THE FINAL ACCEPTANCE OF THE PERMANENT CONTROL MEASURES. THE CONTRACTOR/DEVELOPER IS REQUIRED BY THE CITY OF BURTON TO PREPARE AND SUBMIT A SOIL EROSION AND SEDIMENTATION CONTROL PLAN IN ORDER TO OBTAIN THE SOIL EROSION AND SEDIMENTATION CONTROL PERMIT AND TO PAY ANY APPLICATION FEES AND BOND FEES NECESSARY TO OBTAIN THE PERMIT. NOTE: SOIL EROSION AND CONSTRUCTION PERMITS AND REVIEWS ARE SEPARATE ITEMS AT THE CITY OF BURTON.

9. STATE CONSTRUCTIONS PERMITS
THE CONSTRUCTION OF PUBLIC SANITARY SEWERS OR PRESSURE PIPES SHALL NOT BEGIN UNTIL THE REQUIRED STATE CONSTRUCTION PERMITS HAVE BEEN OBTAINED. NOTE: SOIL EROSION APPROVAL AND CONSTRUCTION APPROVAL ARE SEPARATE ITEMS AT THE CITY OF BURTON.

10. ROADWAY PERMITS
A PERMIT FROM EITHER THE AGENCY HAVING AUTHORITY OVER THE ROADWAYS IS REQUIRED FOR ALL CONSTRUCTION WITHIN ANY ROAD RIGHT-OF-WAY. IT IS THE CONTRACTOR'S RESPONSIBILITY TO SECURE ALL NECESSARY PERMITS, POST ALL NECESSARY BONDS, PAY ALL FEES, AND OBTAIN ANY REQUIRED INSURANCES.

11. CONSTRUCTION OBSERVATION
ALL CONSTRUCTION SHALL BE PERFORMED UNDER THE OBSERVATION OF A CONSTRUCTION OBSERVER FROM GCDC-WWS OR LOCAL MUNICIPALITY HAVING JURISDICTION. IT IS THE CONTRACTOR'S RESPONSIBLITILTY TO NOTIFY THE OBSERVING AGENCIES (3) WORKING DAYS PRIOR TO STARTING CONSTRUCTION TO ARRANGE FOR ON-SITE OBSERVATION AND TESTING. GCDC-WWS OR THE LOCAL MUNICIPALITY HAVING JURISDICTION SHALL BE NOTIFIED FOR A FINAL INSPECTION.

12. CONTRACTOR'S MINIMUM WAGE & USE OF IN-COUNTY LABOR
THE CONTRACTOR SHALL EMPLOY COMPETENT AND SKILLED WORKERS THROUGHOUT THE COURSE OF THE PROJECT. THE CONTRACTOR SHALL STRIVE TO USE GENESEE COUNTY RESIDENTS WHEN FEASIBLE. THE CONTRACTOR SHALL BE REQUIRED TO PAY THE PREVAILING WAGE RATES AS ESTABLISHED BY THE BUILDING AND CONSTRUCTION TRADES DEPARTMENT OF THE AMERICAN FEDERATION OF LABOR WHICH APPLIES TO THE COUNTY OF GENESEE. THESE RATES CAN BE OBTAINED BY CONTACTING THE MICHIGAN DEPARTMENT OF CONSUMER AND INDUSTRIAL SERVICES.

13. MIOSHA SAFETY REQUIREMENTS
ALL WORK, WORK PRACTICE, AND MATERIALS SHALL COMPLY WITH ALL APPLICABLE STATE AND FEDERAL SAFETY GUIDELINES, OCCUPATION, HEALTH AND ENVIRONMENTAL REGULATIONS, AND ALSO NFPA AND ANSI CODES AS APPLICABLE. ALL WORK INSIDE A CONFINED SPACE, SUCH AS MANHOLES OR OTHER UNDERGROUND STRUCTURES, SHALL BE COORDINATED WITH THE UTILITY OWNER, AND ALL WORKER SAFETY REQUIREMENTS STRICTLY ENFORCED. THE CONTRACTOR SHALL HAVE ITS SAFETY PLAN ON FILE WITH THE CITY OF BURTON AND ONE COPY ON SITE AT ALL TIMES.

14. ROADWAY REQUIREMENTS FOR UTILITY CONSTRUCTION
THE CONTRACTOR SHALL ABIDE BY ALL THE REQUIREMENTS OF THE GCRC OR LOCAL MUNICIPALITY REGARDING THE CONSTRUCTION OF PRESSURE PIPE AND SEWER MAINS, MAINTAINING TRAFFIC, BARRICADING, BORING, BACK FILLING AND RESTORATION WITHIN ROAD RIGHT-OF-WAY.

15. OPEN CUTTING OF COUNTY/LOCAL ROADS
WHEN OPEN CUTTING OF GRAVEL OR HARD SURFACED ROADS ARE INCORPORATED INTO THE PROJECT, THE CONTRACTOR SHALL OBTAIN THE APPROVAL AND ABIDE BY ALL REQUIREMENTS OF THE AGENCY HAVING AUTHORITY OVER THE ROADWAYS, AND BY THE SPECIFICATIONS OF THE CITY OF BURTON.

16. GRAVEL ROAD CONTAMINATION BY CONSTRUCTION
IF IT IS DETERMINED BY THE AGENCY HAVING AUTHORITY OVER THE ROADWAYS THAT GRAVEL ROADS HAVE BECOME CONTAMINATED DURING CONSTRUCTION THE ROAD MUST BE REPAIRED PER THE AGENCY HAVING AUTHORITY OVER THE ROADWAYS. WHERE THE EXISTING ROAD GRAVEL IS REMOVED BECAUSE OF CONSTRUCTION, ALL WORK AND MATERIALS SHALL MEET THE REQUIREMENTS AND SPECIFICATIONS OF THE AGENCY HAVING AUTHORITY OVER THE ROADWAYS.

17. RESTORATION OF GRAVEL SHOULDERS
IF IT IS DETERMINED BY THE AGENCY HAVING AUTHORITY OVER THE ROADWAYS THAT GRAVEL SHOULDERS HAVE BEEN CONTAMINATED BY CONSTRUCTION ACTIVITIES, THE CONTRACTOR SHALL RE-GRAVEL PER THE AGENCY HAVING AUTHORITY OVER THE ROADWAYS. ALL WORK AND MATERIALS SHALL MEET THE REQUIREMENTS AND SPECIFICATIONS OF THE AGENCY HAVING AUTHORITY OVER THE ROADWAYS.

18. COMPACTED GRANULAR BACKFILL FOR ROADWAYS, DRIVES, ETC.
ALL TRENCH EXCAVATION WITHIN A ONE-ON-ONE INFLUENCE OF A ROADWAY, DRIVEWAY CROSSINGS, PARKING LOTS, OR AS OTHERWISE NOTED ON THE PLANS, SHALL BE BACKFILLED WITH COMPACTED SAND MDOT CLASS II (A5) PER THE SCHEDULE OF BACKFILLING, FOUND IN THE SPECIFICATIONS. IN ADDITION, SEE THE SPECIFICATIONS FOR THE REQUIREMENTS FOR COMPACTION IN THESE AREAS. THIS STANDARD ALSO INCLUDES SERVICE LEADS UNLESS BORED.

19. SURFACE RESTORATION
ALL DISTURBED AREAS SHALL BE COMPLETELY RESTORED IN STRICT COMPLIANCE WITH THE SOIL EROSION AND SEDIMENTATION SPECIFICATIONS AND TO THE SATISFACTION OF GCDC-WWS, GCDC-SWM, GCRC, MDOT, AND THE LOCAL MUNICIPALITY. ALL COSTS FOR THE CLEANUP, RESTORATION WORK, AND OTHER INTERMEDIATE OPERATIONS SUCH AS, BUT NOT LIMITED TO, CONSTRUCTION SIGNAGE, STREET SWEEPING, AND MAINTAINING EXISTING UTILITIES, SHALL BE CONSIDERED INCLUSIVE AND AT NO ADDITIONAL COST TO THE OWNER. AREAS DISTURBED DURING CONSTRUCTION SHALL RECEIVE A 4" APPLICATION OF SCREENED TOPSOIL, FERTILIZED AND SEEDED. ALL EXCESS MATERIALS, DEBRIS, AND SIMILAR ITEMS SHALL BE REMOVED FROM THE PROJECT AREA BY THE CONTRACTOR AND DISPOSED OF PROPERLY. ALL GROUND SURFACES SHALL BE RESTORED TO ORIGINAL CONDITION OR BETTER PRIOR TO FINAL APPROVAL.

20. TRAFFIC CONTROL
THE CONTRACTOR SHALL EXECUTE THE WORK IN A MANNER SUCH THAT TRAFFIC IS MAINTAINED AND ACCESS IS PROVIDED TO ALL RESIDENCES, BUSINESSES, AND COMMERCIAL ESTABLISHMENTS. TRAFFIC SHALL BE MAINTAINED IN ACCORDANCE WITH THE TRAFFIC CONTROL PLANS AND THE LATEST EDITION OF THE <u>MICHIGAN MANUAL OF UNIFORM TRAFFIC CONTROL DEVICES, PART 6</u> AND THE REQUIREMENTS OF THE AGENCY HAVING AUTHORITY OVER THE ROADWAYS OR AS DIRECTED BY THE ENGINEER.

21. SIGNING AND BARRICADING
SIGNING AND BARRICADING SHALL BE PROVIDED BY THE CONTRACTOR IN ACCORDANCE WITH THE DETAILS ON THE PLANS, THE LATEST EDITION OF THE <u>MICHIGAN MANUAL OF UNIFORM TRAFFIC CONTROL DEVICES, PART 6</u> AND THE REQUIREMENTS OF THE AGENCY HAVING AUTHORITY OVER THE ROADWAYS. SIGNS AND BARRICADES LEFT IN PLACE AFTER DARK SHALL BE LIGHTED.

22. PROTECTION OF HAZARDOUS AREAS
EXCAVATION AND HAZARDOUS AREAS SHALL BE PROTECTED BY BARRICADES, SNOW FENCE, OR OTHER APPROPRIATE MEANS. BARRICADES LEFT IN PLACE AFTER DARK SHALL BE LIGHTED.

23. STORM WATER DRAINAGE DURING CONSTRUCTION
THE CONTRACTOR/DEVELOPER SHALL OBTAIN THE SERVICES OF A CERTIFIED STORM WATER OPERATOR AND COMPLY WITH THE PROVISIONS OF THE NPDES AND SESC PERMITS. THE CONTRACTOR SHALL MAINTAIN DITCH DRAINAGE DURING CONSTRUCTION AND SHALL NOT OBSTRUCT SUMP PUMP LEADS DISCHARGING INTO THE DITCH. THE CONTRACTOR SHALL TAKE ALL NECESSARY MEASURES TO PROTECT ALL STORM SEWER FACILITIES, SUCH AS CATCH BASINS AND CULVERTS, DURING CONSTRUCTION. CULVERTS AND CATCH BASINS CONTAMINATED DURING CONSTRUCTION SHALL BE CLEANED.

24. UTILITY INFORMATION
UTILITY INFORMATION IS DELINEATED IN ACCORDANCE WITH THE LOCATIONS PROVIDED BY UTILITY OWNERS. THE DESIGN ENGINEER IS NOT RESPONSIBLE FOR THE ACCURACY OF THE INFORMATION OR THE LOCATION AT WHICH THESE SERVICES EXIST. DIFFERING FIELD CONDITIONS SHALL BE BROUGHT TO THE ATTENTION OF THE ENGINEER.

25. EXISTING UTILITIES
THE CONTRACTOR SHALL MAINTAIN ALL EXISTING SANITARY SEWER, PRESSURE PIPE, OR STORM SEWER CONNECTIONS IN SERVICE THROUGHOUT THE CONSTRUCTION PERIOD. THE CONTRACTOR SHALL PROVIDE OR ARRANGE FOR THE TEMPORARY SUPPORT OF GAS MAIN, TELEPHONE, FIBER OPTIC, CABLE, PRESSURE PIPE, SANITARY SEWER, STORM SEWER, AND UTILITY POLES WHERE NEEDED. ALL STORM SEWERS DAMAGED OR REMOVED, OR RELOCATED BY THE CONTRACTOR, SHALL BE REPLACED WITH THE SAME SIZE AND QUALITY PIPE BY THE CONTRACTOR AT NO ADDITIONAL COST TO THE PROJECT. ALL UTILITIES UNDERMINED BY THE EXCAVATION SHALL HAVE COMPACTED SAND BACKFILL PLACED UNDER THEM, UNLESS 6AA CRUSHED LIMESTONE (A1) OR 22A GRAVEL (A2) IS SHOWN ON THE CONSTRUCTION PLANS. ALL WORK, INCLUDING THE REBORING OF SANITARY SEWER SERVICE LEADS AND WATERMAIN LEADS TO ACCOMMODATE CONSTRUCTION TO CLEAR EXISTING SERVICES, SHALL BE INCLUSIVE TO THE PROJECT.

26. SHOP DRAWINGS
PRIOR TO THE START OF CONSTRUCTION, THE CONTRACTOR SHALL FURNISH TO THE CITY OF BURTON SHOP DRAWINGS AND/OR CATALOG CUTS FOR ALL MAJOR MATERIALS AND EQUIPMENT ITEMS PER THE STANDARD SPECIFICATIONS.

27. NON-STOPPAGE CLAUSE
THE CONTRACTOR SHALL BE REQUIRED TO COMPLETE ALL WORK IN AN EXPEDITIOUS MANNER AND SHALL NOT STOP CONSTRUCTION FOR EXTENDED PERIODS ONCE CONSTRUCTION HAS BEGUN WITHOUT APPROVAL OF THE CITY OF BURTON.

28. DISPOSAL OF EXCESS EXCAVATED MATERIAL
ALL EXCESS EXCAVATED MATERIALS SHALL BE DISPOSED OF BY THE CONTRACTOR, WITH ALL PERMITS, PERMISSIONS, AND LOCATIONS PROVIDED BY THE CONTRACTOR. ADJACENT PROPERTY OWNERS SHALL BE GIVEN PREFERENCE FOR DISPOSAL SITES. WRITTEN PERMISSION FOR DISPOSAL ON ADJACENT PROPERTY OWNERS SHALL BE PROVIDED TO THE CITY OF BURTON.

29. CONSTRUCTION STAKING
CONSTRUCTION STAKING SHALL BE PROVIDED BY A PROFESSIONAL SURVEYOR LICENSED IN THE STATE OF MICHIGAN, HIRED AND PAID FOR BY THE CONTRACTOR, AND APPROVED BY THE CITY OF BURTON.

30. FINAL ELEVATIONS OF SURFACE UTILITIES
ALL FINAL ELEVATIONS OF MANHOLE CASTINGS, HYDRANTS, VALVES, AND VALVE BOXES SHALL BE APPROVED BY THE CITY OF BURTON REPRESENTATIVE IN THE FIELD. ANY ADJUSTMENTS THAT ARE MADE ARE AT NO ADDITIONAL COST TO THE OWNER.

31. AS-BUILT INFORMATION
UPON COMPLETION OF CONSTRUCTION, AND PRIOR TO FINAL APPROVAL FROM GCDC-WWS, THE DEVELOPER SHALL FURNISH GCDC-WWS WITH ONE COMPLETE SET OF "AS-BUILT" DRAWINGS ON MYLAR AND THE CITY OF BURTON WITH ONE COMPLETE SET OF "AS-BUILT" DRAWINGS ON MYLAR AND ONE ELECTRONIC COPY. THESE "AS-BUILTS" SHALL BE DERIVED FROM THE INFORMATION COLLECTED BY THE GCDC-WWS OR MUNICIPAL CONSTRUCTION OBSERVER.

32. 2-YEAR MAINTENANCE BOND
UPON COMPLETION OF CONSTRUCTION AND PRIOR TO FINAL APPROVAL, THE CONTRACTOR SHALL FURNISH THE CITY OF BURTON WITH A 2-YEAR MAINTENANCE AND GUARANTEE BOND.

33. SOIL EROSION AND SEDIMENTATION CONTROL RELEASE
PRIOR TO FINAL ACCEPTANCE BY THE CITY OF BURTON, THE CONTRACTOR SHALL REQUEST A FINAL INSPECTION OF ALL SOIL EROSION AND SEDIMENTATION CONTROL MEASURES AND RECEIVE WRITTEN APPROVAL. THE SOIL EROSION AND SEDIMENTATION CONTROL BOND WILL BE RELEASED UPON CITY OF BURTON FINAL APPROVAL.

34. ORDER OF PRECEDENCE
IN RESOLVING INCONSISTENCIES AMONG TWO OR MORE SECTIONS OF THE CONTRACT DOCUMENTS, PRECEDENCE SHALL BE GIVEN IN THE FOLLOWING ORDER FROM (A) THROUGH (G):

A. DRAWINGS
B. AGREEMENT, AND ANY ADDENDA OR CONTRACT MODIFICATIONS (WITH THE CITY OF BURTON)
C. BID (WITH TEH CITY OF BURTON)
D. CITY OF BURTON SUPPLEMENTARY CONDITIONS
E. CITY OF BURTON INSTRUCTION TO BIDDERS
F. GENERAL CONDITIONS OF THE CONTRACT (WITH THE CITY OF BURTON)
G. CITY OF BURTON SPECIFICATIONS, LATEST EDITION

SANITARY CONSTRUCTION NOTES

1. ALL MATERIAL AND CONSTRUCTION PROCEDURES SHALL COMPLY WITH THE LATEST GCDC-WWS / CITY OF BURTON SPECIFICATIONS AND STANDARD DETAILS.

2. NO CONNECTION TO AN EXISTING SANITARY SEWER SHALL BE MADE WITHOUT THE PRIOR APPROVAL OF THE CITY OF BURTON. THE CITY OF BURTON SHALL HAVE FINAL INSPECTION AUTHORITY AND APPROVAL FOR UNDERGROUND SANITARY SEWER FACILITIES.

3. THE MATERIAL FOR THE SANITARY SEWER SHALL BE SPECIFIED ON THE CONSTRUCTION DRAWINGS. THE FOLLOWING MATERIALS ARE ACCEPTABLE TO THE CITY OF BURTON:
A. 8" TO 15". PVC WITH A MINIMUM SDR OF 26 CONFORMING TO ASTM D-3034-00 GASKETED SEWER PIPE.
B. LARGER THAN 15". REINFORCED CONCRETE PIPE CONFORMING TO ASTM C-76-03. JOINTS SHALL BE MODIFIED TONGUE & GROOVE TYPE WITH RUBBER GASKETS CONFORMING TO ASTM C-443-02. MINIMUM SIZE SHALL BE CLASS III, WALL B.

4. ALL SANITARY SEWER SERVICE RISERS SHALL BE 6" INTERNAL DIAMETER SDR-26 PVC OR LOWER CONFORMING TO ASTM D-3034-00. JOINTS SHALL BE RUBBER GASKET JOINTS OR SOLVENT WELD BELL JOINTS. ALL SERVICE RISERS SHALL BE MARKED WITH A 5/8" REROD AT THEIR TERMINUS BURIED 1' BELOW THE SURFACE. THE RISERS SHALL BE LEFT AT 8-10' DEEP AT THE PROPERTY LINE OR EASEMENT LINE, OR AS DEEP TO SERVICE BASEMENTS. WEEP TILE, PERIMETER DRAINS, DOWN SPOUTS, OR ANY OTHER SOURCE OF WATER, SHALL NOT BE CONNECTED TO THE SANITARY SEWER.

5. PRECAST CONCRETE MANHOLES SHALL CONFORM TO ASTM C-478-03 WITH RUBBER JOINTS CONFORMING TO ASTM C-443-02. ALL FINAL ELEVATIONS OF MANHOLE CASTINGS SHALL BE DETERMINED BY THE CITY OF BURTON REPRESENTATIVE. MANHOLE FRAME AND COVERS SHALL BE BOLT-DOWN, WATERTIGHT EAST JORDAN 1040 ZPT, NEENAH FOUNDRY COMPANY R-1916F, OR CITY OF BURTON APPROVED ALTERNATE. STEPS SHALL BE M.A. INDUSTRIES PS-1-PF, AMERICAN STEP CO. ML-10, OR CITY OF BURTON APPROVED ALTERNATE.

6. ALL SANITARY SEWERS SHALL BE INSTALLED PURSUANT TO THE SANITARY SEWER STANDARD DETAILS. <u>DEEPER SEWERS, EXCESSIVE TRENCH WIDTH, AND WHERE NOTED, THE CONTRACTOR SHALL ADHERE TO THE REQUIREMENTS SPECIFIED.</u>

7. WHERE MANHOLE ADJUSTMENT IS REQUIRED, THE MAXIMUM AMOUNT OF ADJUSTMENT BETWEEN THE CASTING AND THE CONE SHALL BE 6". A MAXIMUM OF TWO ADJUSTMENT RINGS ARE ALLOWED. ONLY 3" OR LARGER CONCRETE ADJUSTMENT RINGS SHALL BE USED. THE MANHOLE SHALL BE WRAPPED PER SD-5 OF THE SANITARY SEWER DETAILS.

8. ALL SANITARY SEWERS THROUGH 21" DIAMETER SHALL UNDERGO A LOW PRESSURE AIR TEST AND AN INFILTRATION TEST, IN CONFORMANCE WITH ASTM C-924-02 OR C-969-02, PRIOR TO FINAL ACCEPTANCE. SANITARY SEWER SYSTEMS LARGER THAN 21" SHALL UNDERGO AN INFILTRATION TEST. THE MAXIMUM ALLOWABLE INFILTRATION FOR PVC SYSTEMS SHALL BE 0 GALLONS PER INCH DIAMETER, PER MILE, PER 24 HOURS AND CONCRETE SYSTEMS SHALL BE 100 GALLONS PER INCH DIAMETER, PER MILE.

9. ALL PUBLIC SANITARY SEWERS 8" OR LARGER SHALL BE INTERNALLY TELEVISED BY THE CONTRACTOR. THE TV REPORT, INCLUDING THE TAPES, SHALL BE GIVEN TO GCDC-WWS AND THE CITY OF BURTON PRIOR TO A REQUEST FOR FINAL INSPECTION. THE CONTRACTOR SHALL BE RESPONSIBLE FOR CLEANING (JETTING) THE LINE AND ASSURING ALL DIRT AND DEBRIS HAS BEEN REMOVED PRIOR TO TELEVISING. PRIOR TO TELEVISING THE LINE WATER SHALL BE PLACED IN THE MAIN FROM THE UPSTREAM MANHOLE UNTIL IT COMES OUT OF THE DOWNSTREAM MANHOLE. THE TV REPORT SHALL LIST THE DISTANCE A HOUSE LEAD IS LOCATED FROM A MANHOLE, ALL SHEAR BREAKS IN THE MAIN OR SERVICE LEADS, ALL LONGITUDINAL CRACKS, BROKEN PIPE, DIPS, OR HIGH POINTS IN THE LINE, ETC. THE CONTRACTOR SHALL REPAIR DAMAGED PIPE BY EXCAVATING THE PIPE AND REPLACING THE LENGTH OF PIPE IN AN APPROVED METHOD. LEAKING JOINTS SHALL BE REPAIRED BY GROUTING. A LEAKING JOINT IS DEFINED AS HAVING SUFFICIENT INFILTRATION TO WET THE INTERIOR OF THE JOINT. GCDC-WWS SHALL BE NOTIFIED WHEN THE LINE IS TO BE TELEVISED AND SHALL BE PRESENT TO INSPECT REPAIRS.

10. SANITARY MANHOLES SHALL BE PLACED AT PROPERTY LINES WHEN FEASIBLE.

11. PRIOR TO PERFORMING ANY TESTING OR FINAL INSPECTION, THE CONTRACTOR SHALL BE REQUIRED TO PROVIDE THE FOLLOWING ITEMS:
A. THE RESULTS OF A PRELIMINARY TEST ON THE SYSTEM.
B. PROVIDE RESULTS OF DENSITY CHECKS ON COMPACTED SAND BACKFILL FROM A CERTIFIED TESTING AGENCY.
C. FURNISH A COMPLETED TWO-YEAR MAINTENANCE & GUARANTEE BOND.
D. PROVIDE MATERIAL CERTIFICATES.
E. COMPLETE FINAL ADJUSTMENTS ON SANITARY SEWER STRUCTURES.
G. THE DEVELOPER SHALL PROVIDE AS-BUILTS TO GCDC-WWS AND THE CITY OF BURTON.

12. THE FINAL TESTING SHALL CONSIST OF VISUAL INSPECTION OF MANHOLES, TELEVISING OF SANITARY MAIN, VACUUM TEST IN THE MANHOLES, LOW AIR PRESSURE TEST AND/OR INFILTRATION TEST DEPENDENT ON THE SIZE OF THE SANITARY MAIN (SEE #8 ABOVE), AND PASSING AN APPROPRIATE SIZED MANDRELL 30 DAYS AFTER THE MAIN HAS BE INSTALLED.

13. PRIOR TO ISSUING FINAL APPROVAL, THE CITY OF BURTON SHALL INSPECT THE FINAL GRADE OF THE PROJECT TO ENSURE THAT NO FURTHER ADJUSTMENTS ARE NECESSARY TO ANY SANITARY SEWER STRUCTURES. IF ANY SUCH ADJUSTMENTS ARE NECESSARY, THE CONTRACTOR SHALL, AT NO ADDITIONAL COST TO THE OWNER MAKE THE REQUIRED CHANGES. FINAL APPROVAL SHALL NOT BE GRANTED UNTIL ALL NECESSARY ADJUSTMENTS HAVE BEEN MADE.

PRESSURE PIPE CONSTRUCTION NOTES

1. ALL MATERIAL AND CONSTRUCTION PROCEDURES SHALL COMPLY WITH THE LATEST GCDC-WWS . CITY OF BURTON SPECIFICATIONS AND STANDARD DETAILS.

2. ALL PUBLIC PRESSURE PIPE SHALL BE DUCTILE IRON. PRESSURE PIPES 10" AND SMALLER SHALL BE DUCTILE IRON CLASS 53 AS A MINIMUM. PRESSURE PIPES 12" AND LARGER SHALL BE DUCTILE IRON CLASS 54 AS A MINIMUM. THE PIPE SHALL BE BELL AND SPIGOT, OR MECHANICAL JOINT FITTINGS WITH A RUBBER GASKET. FITTINGS MAY BE GRAY IRON OR DUCTILE IRON MEETING CLASS 350 PSI RATING. IN CASES OF 3" SANITARY SEWER FORCEMAIN, SDR-21 PVC MAY BE UTILIZED.

3. WHEN INSTALLING PRESSURE PIPE IN AREAS OF PETROLEUM FACILITIES OR OBSERVED GROUND CONTAMINATION, THE ENGINEER SHALL SPECIFY A PETROLEUM CERTIFIED RUBBER GASKET MEETING REQUIRED PROPERTIES OF (SBR) RUBBER GASKET AND TESTING METHODS PER AWWA C111/A21.11-00.

4. ALL PIPES, VALVES, AND FITTINGS SHALL BE POLYWRAPPED, EXCEPT IN MANHOLES. CIRCUMFERENTIAL WRAPS OF MANUFACTURER RECOMMENDED TAPE SHALL BE PLACED AT NO GREATER THAN 4' INTERVALS ALONG THE BARREL OF THE PIPE, WITH THE EXCESS FOLDED OVER THE TOP TO TAKE OUT EXCESS SLACK, HELPING TO MINIMIZE THE SPACE BETWEEN THE POLYETHYLENE AND THE PIPE. COMPLETE THE INSTALLATION BY OVERLAPPING THE POLYETHYLENE TUBE WRAP AT EACH END AND SEAL ENDS PER AWWA C105/A21.5-99.

5. WHERE SANITARY SERVICE LEADS OR OTHER UTILITIES ARE ENCOUNTERED, THE CONTRACTOR SHALL MAKE ADJUSTMENTS TO PROVIDE CONTINUOUS SERVICE TO PROPERTIES ALONG THE ROUTE OF CONSTRUCTION. ALL WORK, INCLUDING THE REBORING OF SANITARY SEWER SERVICE LEADS TO ACCOMMODATE CONSTRUCTION, OR ADJUSTING PRESSURE PIPE INSTALLATION TO CLEAR EXISTING SERVICES, SHALL BE INCLUSIVE TO CONSTRUCTION.

6. ALL PRESSURE PIPES SHALL HAVE A MINIMUM COVER OVER THE TOP OF THE PIPE OF 5' FROM FINISHED GRADE, 5' CLEARANCE UNDER DRAINS, 5' CLEARANCE BELOW EXISTING DITCHES, AND/OR A MINIMUM 5' BELOW THE EXISTING ROAD. THE STANDARD LAYING CONDITIONS FOR WATERMAIN SHALL BE A 30" TRENCH WIDTH, OR PIPE DIAMETER PLUS 12". THE PIPE SHALL BE LAID ON A 4" MDOT CLASS II SAND (A5), WITH RECESSES TO ACCOMMODATE PIPE BELLS OR AS SHOWN ON PLANS.

7. ALL TRENCH EXCAVATION, UNDER OR WITHIN 5' OF EXISTING OR PROPOSED PAVING, SHALL BE BACK FILLED WITH COMPACTED MDOT CLASS II SAND (A5).

8. THE CONTRACTOR SHALL RESTRAIN ALL THRUST IN THE SYSTEM BY THE USE OF CITY OF BURTON APPROVED RESTRAINED JOINTS. DURING THE CONSTRUCTION OF WATERMAINS ALL HYDRANTS, TEES, VERTICAL OR HORIZONTAL BENDS AND FUTURE VALVE CONNECTIONS SHALL BE RESTRAINED. THE RESTRAINT SYSTEM AND LOCATION IN THE FIELD SHALL BE DESIGNATED ON THE PLANS.

9. THE CONTRACTOR SHALL ENCASE THE PRESSURE PIPE IN CONCRETE WHERE VERTICAL SEPARATION BETWEEN THE SANITARY SEWER OR STORM SEWER AND THE WATERMAIN IS LESS THAN 18" INCHES.

10. GATE VALVES SHALL BE RESILIENT SEATED CONFORMING TO AWWA C509-01 OR C515-01. ALL VALVES IN PAVED AREAS SHALL BE PLACED IN A CONCRETE MANHOLE STRUCTURE SIZED PER GCDC-WWS / CITY OF BURTON PRESSURE PIPE DETAIL SD-8. VALVES SHALL HAVE A VERTICAL, NON-RISING STEM, AND OPEN CLOCKWISE.

11. FIRE HYDRANTS SHALL CONFORM TO AWWA C502-94. ALL HYDRANTS SHALL BE TRAFFIC MODELS WITH BREAKAWAY FLANGES, AND SHALL HAVE THE DRAIN HOLES FACTORY PLUGGED. ALL THE FIRE HYDRANT ASSEMBLIES FROM THE TEE THROUGH THE HYDRANT, SHALL BE RESTRAINED BY A GCDC-WWS APPROVED METHOD. FIRE HYDRANTS SHALL BE PLACED AT PROPERTY LINES AND SHALL BE PAINTED YELLOW WITH THE CAP COLOR CODED IN ACCORDANCE WITH THE STANDARD DETAIL. FINAL ELEVATIONS AND ADJUSTMENTS TO GRADE, USING EXTENSION PIECES IF REQUIRED, SHALL BE ACCOMPLISHED BY THE CONTRACTOR AT NO EXTRA COST TO THE PROJECT. HYDRANTS SHALL HAVE A 5" VALVE OPENING. FIRE HYDRANTS SHALL BE EAST JORDAN 5 BR OR MUELLER CENTURION.

12. PRESSURE TAPS TO EXISTING WATERMAINS, AND CONNECTIONS TO EXISTING VALVES, SHALL BE MADE ONLY UNDER CITY OF BURTON INSPECTION. ALL VALVES OPENING AND CLOSING SHALL BE PERFORMED BY THE OPERATIONAL AUTHORITY. (ONLY A CITY OF BURTON APPROVED TAPPING SLEEVE IS ALLOWED FOR ALL PRESSURE TAPS.) A CONCRETE MANHOLE SHALL BE REQUIRED AROUND ALL PRESSURE TAPS 8" AND OVER.

13. THE CONTRACTOR SHALL HAVE THE OPTION OF PRESSURE TESTING THE WATERMAIN AGAINST THE EXISTING VALVE AT THE POINT OF BEGINNING OF THE PROJECT. IF THE EXISTING VALVE LEAKS, THE CONTRACTOR SHALL MAKE REPAIRS AND REPEAT THE PRESSURE TEST AGAINST THE EXISTING VALVE, AT NO COST TO THE OWNER.

14. WATERMAINS SHALL BE TESTED IN ACCORDANCE WITH AWWA C600-99, AND CHLORINATED IN ACCORDANCE WITH THE LATEST GCDC-WWS AND CITY OF BURTON SPECIFICATIONS. WATERMAINS SHALL BE TESTED TO 150 PSI AS MEASURED AT THE HIGH POINT IN THE WATER LINE. WATERMAIN CHLORINATION SHALL BE OBSERVED AND MONITORED BY THE CITY OF BURTON. CHLORINATION AND TESTING SHALL BE AT THE CONTRACTOR'S EXPENSE. A CERTIFICATE OF APPROVAL FROM THE AGENCY HAVING AUTHORITY SHALL BE ISSUED PRIOR TO THE WATER BEING USED FOR HUMAN CONSUMPTION.

15. WHEN SPECIFIED BY THE CONSTRUCTION DOCUMENTS, THE CONTRACTOR SHALL SUPPLY ALL WATER SERVICE LEADS. THESE LEADS SHALL BE "K" COPPER AND SHALL BE A MINIMUM OF 1" IN DIAMETER AND INSTALLED IN ACCORDANCE WITH THE WATERMAIN STANDARD DETAIL. ALL SERVICE LEADS SHALL BE MARKED WITH A 2" X 4" X 8' WOOD STAKE ALONG WITH WITNESS POINTS SUPPLIED TO THE OWNER. CORPORATIONS SHALL BE BRASS, MUELLER H-15200 OR APPROVED EQUIVALENT.

16. THE CONTRACTOR SHALL INSTALL, AS A MINIMUM, 1" CORPORATIONS ON THE PRESSURE PIPE FOR PRESSURE TESTING, CHLORINE ADDITION, AND FOR BLOW-OFF PURPOSES. THE CORPORATIONS SHALL HAVE COPPER PIPE EXTENDING TO THE GROUND SURFACE. THE CONTRACTOR SHALL REMOVE THE CORPORATION AND COPPER LINE UPON A SATISFACTORY TEST, AND INSTALL A BRASS PLUG, PRIOR TO FINAL ACCEPTANCE.

17. PRIOR TO REQUESTING ANY FINAL PRESSURE TESTING, AND GATHERING THE REQUIRED BACTERIA SAMPLES (FOR WATERMAINS ONLY), THE CONTRACTOR SHALL BE REQUIRED TO PERFORM THE FOLLOWING ITEMS:
A. CONDUCT A PRELIMINARY PRESSURE TEST ON THE SYSTEM
B. PROVIDE RESULTS OF DENSITY CHECKS ON COMPACTED SAND BACKFILL FROM A CERTIFIED TESTING AGENCY.
C. FURNISH A COMPLETED TWO-YEAR MAINTENANCE & GUARANTEE BOND.
D. PROVIDE MATERIAL CERTIFICATES.
E. COMPLETE FINAL ADJUSTMENTS OF FIRE HYDRANT (FOR WATERMAINS ONLY), VALVES, AND MANHOLES.
F. PROPER CAP COLOR OF FIRE HYDRANTS (FOR WATERMAINS ONLY).
G. THE DEVELOPER SHALL PROVIDE AS-BUILTS TO GCDC-WWS AND THE CITY OF BURTON.

18. PRIOR TO ISSUING FINAL APPROVAL, THE CITY OF BURTON SHALL INSPECT THE FINAL GRADE OF THE PROJECT TO ENSURE THAT NO FURTHER ADJUSTMENTS ARE NECESSARY TO ANY PRESSURE PIPE STRUCTURES. IF ANY SUCH ADJUSTMENTS ARE NECESSARY, THE CONTRACTOR SHALL, AT NO ADDITIONAL COST TO THE OWNER MAKE THE REQUIRED CHANGES. FINAL APPROVAL SHALL NOT BE GRANTED UNTIL ALL NECESSARY ADJUSTMENTS HAVE BEEN MADE.

REVISIONS:
PER CITY OF BURTON COMMENTS, 12-7-04

DEPARTMENT OF PUBLIC WORKS
4093 MANOR DRIVE
BURTON, MICHIGAN 48519 PHONE: 742-9230

City of Burton

STANDARD CONSTRUCTION NOTES

DWG. NAME: STANDARD NOTES

Attachment: 16-17 (2254 : SPR #16-17)

SD-1 PRESSURE PIPE BEDDING AND BACKFILL

NOTES

1. PLACE 12" OF CRUSHED LIMESTONE 22A (A2) ON THE COMPACTED SAND BACKFILL (A5) FOR ALL DRIVES, PARKING LOTS OR OTHER HARD SURFACED AREAS.
2. THE CONTRACTOR SHALL COMPACT THE SAND BACKFILL (A5) TO 95% OF THE MATERIAL UNIT WEIGHT BY MODIFIED PROCTOR ACROSS ALL ROADWAYS AND DRIVES PER THE SCHEDULE OF BACKFILLING IN THE SPECIFICATIONS. THIS INCLUDES SERVICE LEADS UNLESS BORED. THE CONTRACTOR SHALL DO THE TESTING WITH THE RESULTS SUBMITTED TO GCDC-WWS PRIOR TO FINAL TESTING.
3. WHERE THE GROUND ELEVATION AT THE TRENCH LINE IS ABOVE THE ELEVATION OF THE CENTERLINE OF THE ROAD, THE CONTRACTOR SHALL INSTALL THE PRESSURE PIPE 6' BELOW THE ELEVATION OF THE ROAD. THE EXTRA DEPTH SHALL BE NOTED ON THE AS-BUILT DRAWINGS.
4. FOR ADDITIONAL CONSIDERATION OF PIPE ZONE EMBEDMENT CONDITIONS, SEE AWWA C600-99.
5. DESIGN ENGINEER SHALL REVIEW AND ADJUST PIPE THICKNESS DESIGN RECOMMENDATIONS IN AWWA C151/A21.51-02 FOR ADDITIONAL DEPTHS OF COVER.

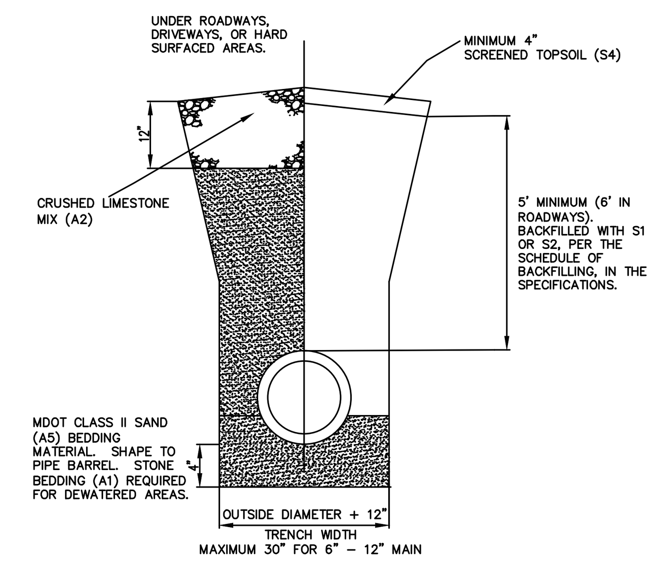

SD-1
PRESSURE PIPE BEDDING AND BACKFILL
05/01/2004 PRESSURE PIPE

SD-2 OPEN CUTTING PERPENDICULAR TO ROAD

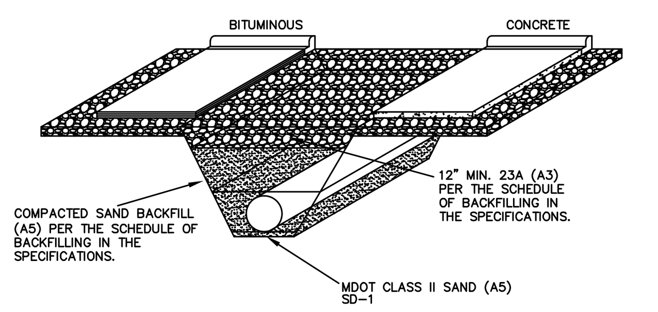

SPECIAL REQUIREMENTS FOR OPEN CUTTING HARD SURFACE AND/OR GRAVEL ROADS

1. THE CONTRACTOR SHALL ACQUIRE A SPECIAL OPEN CUT APPROVAL FROM THE AGENCY HAVING AUTHORITY OVER THE ROADWAYS.
2. THE CONTRACTOR SHALL SUPPLY CONTINGENT LIABILITY INSURANCE FOR THE AGENCY HAVING AUTHORITY OVER THE ROADWAYS.
3. THE PROTECTION OF THE WORK SHALL BE IN ACCORDANCE WITH THE "MICHIGAN MANUAL OF UNIFORM TRAFFIC CONTROL DEVICES, PART 6". BARRICADES, WARNING AND LIGHTING NECESSARY FOR PUBLIC SAFETY TO BE APPROVED BY THE ENGINEER AND THE AGENCY HAVING AUTHORITY OVER THE ROADWAYS PRIOR TO STARTING CONSTRUCTION.
4. CONTRACTOR SHALL EXCAVATE ALL MATERIAL TO PROPOSED GRADE.
5. THE WATERMAIN SHALL BE PLACED ON MDOT CLASS II SAND (A5) BEDDING.
6. ALL BACKFILL SHALL BE MDOT CLASS II SAND (A5), PLACED PER THE SCHEDULE OF BACKFILLING.
7. THE SAND BACKFILL SHALL EXTEND FROM THE OUTSIDE EDGE OF SHOULDER TO OUTSIDE EDGE OF SHOULDER, OR FOR CURB AND GUTTER SECTIONS, SHALL BE EXTENDED 5' FROM THE OUTSIDE EDGE OF THE CURB TO THE OUTSIDE EDGE OF THE GUTTER.
8. THE FINAL 12" OF ALL BACKFILL SHALL BE 22A LIMESTONE (A2) SUBBASE MODIFIED PER GCRC SPECIFICATIONS. ALL SHOULDERS SHALL BE REPAIRED PER THE AGENCY HAVING AUTHORITY OVER THE ROADWAYS.
9. THE CONTRACTOR SHALL REPLACE THE ROAD SURFACE WITH THE AGENCY HAVING AUTHORITY OVER THE ROADWAYS APPROVED MATERIAL.
10. CONTRACTOR SHALL MAINTAIN TEMPORARY ACCESS TO ALL AREAS DURING CONSTRUCTION. A PUBLIC ROAD MAY BE CLOSED FOR 1/2 WIDTH CONSTRUCTION WITH AGENCY HAVING AUTHORITY OVER THE ROADWAYS APPROVAL BUT THE CLOSING TIME CANNOT EXCEED 8 HOURS. CONTRACTOR MAY USE SHOULDERS AND TEMPORARY PATCHES TO KEEP A ROAD OPEN.

SD-2
OPEN CUTTING PERPENDICULAR TO ROAD
05/01/2004 PRESSURE PIPE

SD-3 THRUST BLOCK DETAILS

TABLE INDICATES MINIMUM BEARING

DIA. OF PIPE OR BRANCH OF TEE	90° BEND OR SMALLER			45° BEND			22 1/2° BEND			PLUGS, HYDRANTS AND TEES		
	A	B	C	A	B	C	A	B	C	A	B	C
6"	2'-0"	2'-0"	0'-9"	2'-0"	1'-0"	0'-9"	2'-0"	1'-0"	0'-9"	2'-0"	2'-0"	1'-0"
8"	3'-0"	2'-0"	1'-0"	2'-0"	2'-0"	1'-3"	2'-0"	1'-0"	1'-0"	3'-0"	2'-0"	1'-9"
12"	4'-0"	3'-0"	1'-6"	3'-0"	3'-0"	1'-6"	2'-0"	2'-0"	1'-6"	4'-0"	3'-0"	2'-0"
16"	6'-0"	4'-0"	1'-6"	4'-0"	4'-0"	1'-6"	3'-0"	3'-0"	1'-6"	5'-0"	4'-0"	2'-0"
24"	8'-0"	6'-6"	2'-0"	5'-0"	5'-0"	2'-0"	4'-0"	4'-0"	2'-0"	8'-0"	6'-0"	2'-6"

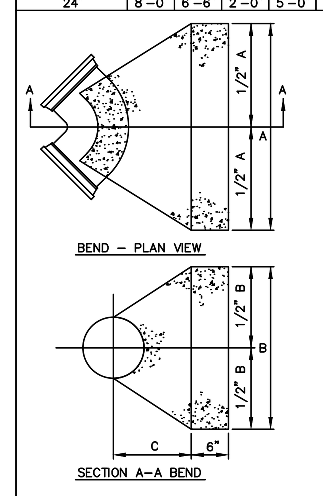

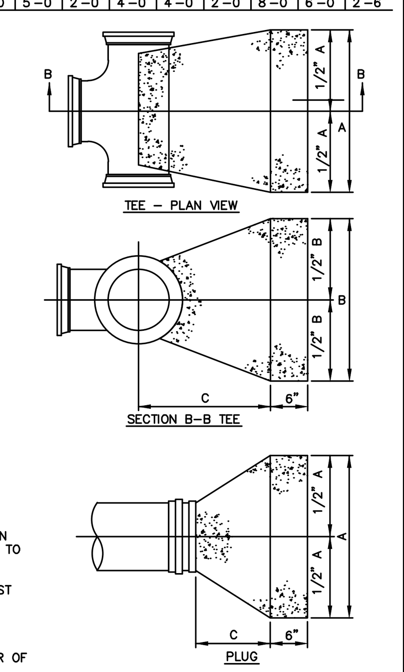

NOTES

1. CONTRACTOR SHALL USE CITY OF BURTON APPROVED RESTRAINED JOINTS IN ADDITION TO THRUST BLOCKS.
2. USE 3000 PSI CONCRETE FOR ALL THRUST BLOCKS.
3. POUR AGAINST UNDISTURBED SOIL.
4. KEEP BOLTS, FITTINGS AND JOINTS CLEAR OF CONCRETE. (COVER @ PLASTIC)
5. BEARING AREA IS FIGURED ON 2000-PSI SOIL CAPACITY.

SD-3
THRUST BLOCK DETAILS
05/01/2004 PRESSURE PIPE

SD-4 MINIMUM PIPE RESTRAINT SCHEDULE

MINIMUM PIPE RESTRAINT SCHEDULE FOR GROUND BURIED PRESSURE PIPES [1]

LENGTH (IN FEET) OF RESTRAINT REQUIRED [2]

DEFLECTION ANGLE	22 1/2°	33 1/4°	45°	56 1/2°	67 1/2°	78 1/4°	90° TEE OR DEAD END
PIPE							
6"	3	6	11	16	23	29	37
8"	4	8	15	22	31	41	50
10"	5	11	18	28	38	49	61
12"	6	13	22	33	45	59	73
14"	7	14	25	37	52	68	84
16"	8	16	28	42	59	77	95
18"	8	18	31	47	66	86	107
20"	9	20	35	53	73	95	118
24"	11	23	40	61	85	111	138
30"	13	29	50	75	105	136	170
36"	15	34	59	88	123	160	199
42"	17	39	67	101	141	184	228
48"	19	43	75	113	157	206	255

NOTES

1. THIS TABLE IS BASED ON A TEST PRESSURE OF 180 PSI (OPERATING PRESSURE + WATER HAMMER). FOR OTHER TEST PROCEDURES, ALL VALUES ARE TO BE INCREASED OR DECREASED PROPORTIONALLY.
2. IN EACH DIRECTION FROM POINT OF DEFLECTION OR TERMINATION EXCEPT FOR A TEE AT WHICH ONLY THE BRANCH IN THE DIRECTION OF THE TEE STEM.
3. IF TIE RODS ARE APPROVED BY MUNICIPALITY, THEY MUST BE STAINLESS STEEL GRADE 316 RODS & NUTS. PLACE (2) RODS 5/8 INCH DIAMETER MINIMUM FOR WATERMAIN 6 INCH TO 10 INCH, AND (4) RODS 5/8 INCH DIAMETER MINIMUM FOR 12 INCH AND LARGER.
4. CONTRACTOR SHALL USE CITY OF BURTON APPROVED RESTRAINED JOINTS.
5. IN-LINE VALVES SHALL BE CONSIDERED DEAD ENDS IN BOTH DIRECTIONS.
6. THIS TABLE IS PLACED HERE AS A MINIMUM REQUIREMENT FOR THRUST RESTRAINT OF GROUND BURIED PRESSURE PIPES AND NOT DOES ALLEVIATE THE DESIGN ENGINEER OF THE RESPONSIBILITY TO DESIGN PROPER THRUST RESTRAINT SPECIFIC TO THE PROPOSED PROJECT. IN THE CASE OF DUCTILE IRON PIPE, THE DESIGN ENGINEER SHALL FOLLOW THE APPLICABLE STANDARD AS SET FORTH IN THE LATEST EDITION FOR THRUST RESTRAINT DESIGN FROM THE DUCTILE IRON PIPE RESEARCH ASSOCIATION (DIPRA).

SD-4
MINIMUM PIPE RESTRAINT SCHEDULE
05/01/2004 PRESSURE PIPE

SD-5 LOCATION OF THRUST BLOCK RESTRAINT

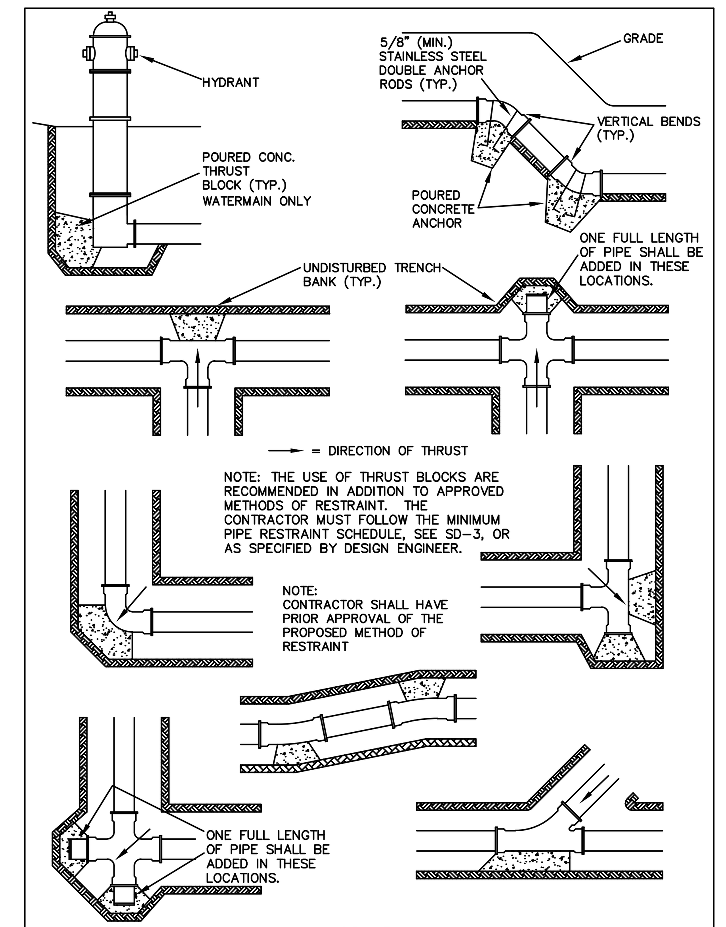

SD-5
LOCATION OF THRUST BLOCK RESTRAINT
05/01/2004 PRESSURE PIPE

SD-6 WATERMAIN BURY AT COUNTY DRAIN, DITCH, OR STREAM

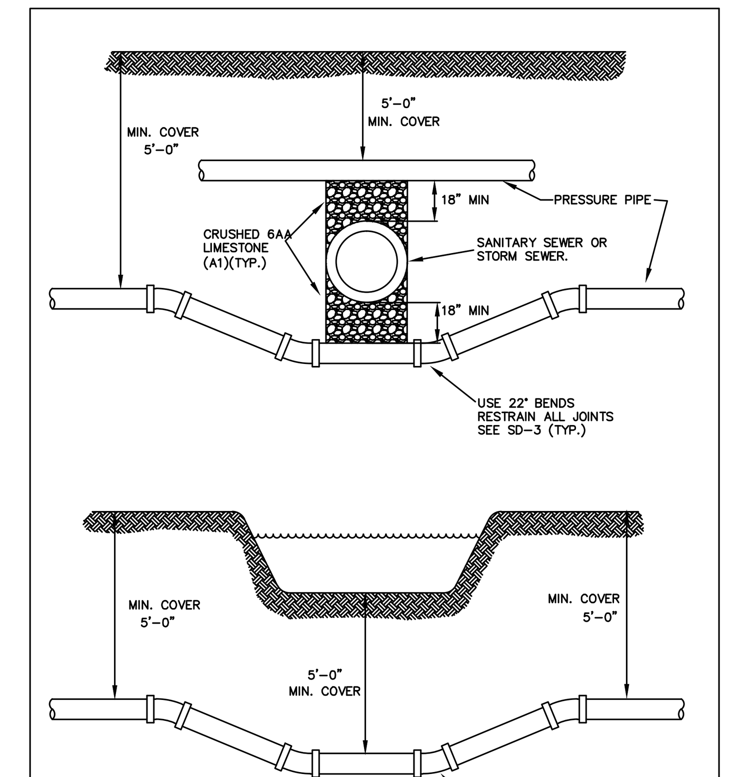

NOTE:
THE DESIGN ENGINEER SHALL DETERMINE THE ACTUAL ELEVATION OF THE DRAIN BOTTOM IN THE FIELD AND PLACE IT ON THE PLAN AND PROFILE VIEW. CONCRETE ENCASEMENTS OR CRADLES SHALL BE INSTALLED WHERE SHOWN ON THE PLANS OR AS DIRECTED BY THE ON-SITE CITY OF BURTON PERSONNEL.

SD-6
WATERMAIN BURY AT COUNTY DRAIN, DITCH, OR STREAM
05/01/2004 PRESSURE PIPE

SD-7 BORE & JACK CONSTRUCTION ON ALL ROADS

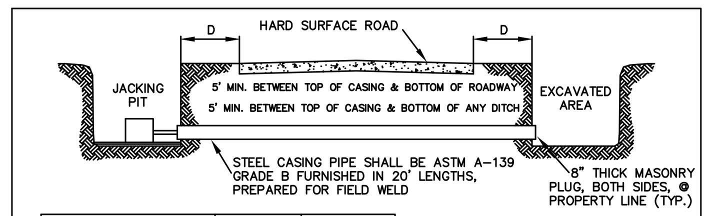

SIZE AND MATERIAL	MIN. CASING DIA. O.D. INCHES	MIN. WALL THICKNESS INCHES
8" D.I. PRESSURE PIPE OR SMALLER 6" SANITARY SEWER V.C.P. OR P.V.C.	12.75	0.375
10"-12" D.I. PRESSURE 8"-10" SANITARY SEWER	20.00	0.375
16" D.I. PRESSURE PIPE 12"-15" SANITARY SEWER	24.00	0.375
18"-24" D.I. PRESSURE 18" SANITARY SEWER CONCRETE	30.00	0.406
21"-24" SANITARY SEWER CONCRETE	36.00	0.469

MDOT
D=30' FOR TRAFFIC OVER 45 MPH
D=20' FOR TRAFFIC UNDER 45 MPH

GCRC
D=10' FOR ROADS WITH SHOULDER/DITCH
D=5' FOR ROADS WITH CURB AND GUTTER

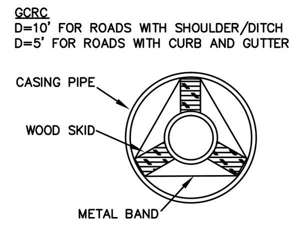

NOTES

1. ALL BORE AND JACK OPERATIONS WITHIN THE ROAD R.O.W. WILL REQUIRE A PERMIT FROM THE AGENCY HAVING AUTHORITY OVER THE ROADWAYS.
2. THE CONTRACTOR SHALL ABIDE BY ALL SAFETY PRECAUTIONS INCLUDING THE MICHIGAN MANUAL OF UNIFORM TRAFFIC CONTROL DEVICES, PART 6 AS REQUIRED BY THE AGENCY HAVING AUTHORITY OVER THE ROADWAYS.
3. THE CONTRACTOR SHALL PROTECT AND RESTORE ALL PROPERTY.
4. THE CONTRACTOR SHALL NAME THE AGENCY HAVING AUTHORITY OVER THE ROADWAYS AS AN ADDITIONAL NAMED INSURED FOR CONTINGENT LIABILITY FOR THE PROPOSED CONSTRUCTION.
5. THE CONTRACTOR SHALL ABIDE BY ALL CONDITIONS STATED IN THE GCRC MEMO OF 9-1-75 LABELED SANITARY SEWER AND WATERMAIN INSTALLATION WITHIN THE LIMITS OF COUNTY HIGHWAYS OR THE REQUIREMENTS OF THE AGENCY HAVING AUTHORITY OVER THE ROADWAYS.
6. THE SHEETING OF THE FRONT FACE OF THE BORE PIT WILL BE REQUIRED IF UNSTABLE SOIL CONDITIONS ARE ENCOUNTERED.
7. THE AUGER MUST ALWAYS PROCEED THE CASING PIPE HEAD.
8. THE CONTRACTOR SHALL NOTIFY THE AGENCY HAVING AUTHORITY OVER THE ROADWAYS A MINIMUM OF 72 HOURS PRIOR TO BEGINNING CONSTRUCTION.
9. WOOD SKIDS AND STAINLESS STEEL METAL BANDS MUST BE INSTALLED FOR ALL BORES TO KEEP THE CARRIER PIPE ON LINE AND GRADE. THE MAXIMUM DISTANCE FROM THE I.D. OF THE CASING PIPE TO THE OUTSIDE EDGE OF THE SKID SHALL BE 1".
10. THE ENDS OF THE CASING PIPE SHALL BE BULK HEADED WITH AN 8" WATER TIGHT MASONRY BULKHEAD.

SD-7
BORE & JACK CONSTRUCTION ON ALL ROADS
05/01/2004 PRESSURE PIPE

SD-8 IN-LINE GATE VALVE IN ROADWAY

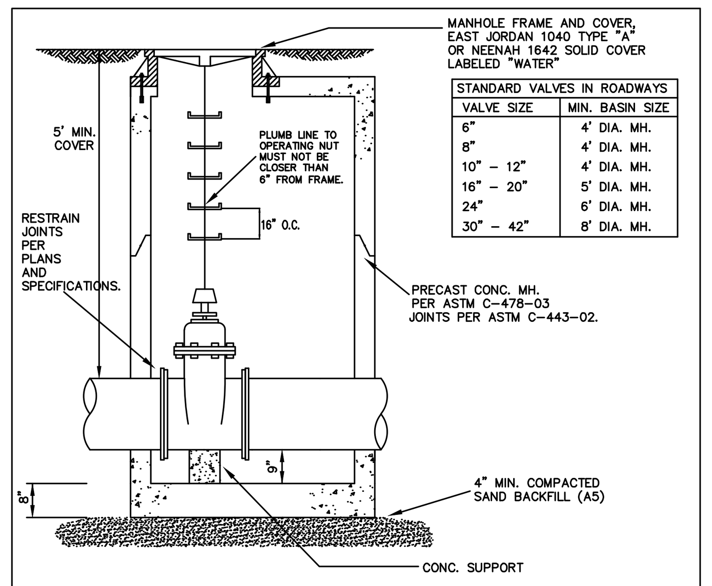

STANDARD VALVES IN ROADWAYS	
VALVE SIZE	MIN. BASIN SIZE
6"	4' DIA. MH.
8"	4' DIA. MH.
10" – 12"	4' DIA. MH.
16" – 20"	5' DIA. MH.
24"	6' DIA. MH.
30" – 42"	8' DIA. MH.

1. VALVE MANHOLES SHALL BE USED UNDER PAVED AREAS, SEE ABOVE TABLE. ALL PRESSURE TAPS & CUT-IN VALVES, 8" AND OVER, MUST BE ENCLOSED WITHIN A CONCRETE VALVE MANHOLE.
2. ALL OTHER VALVES ARE REQUIRED TO HAVE VALVE BOXES. SEE SD-12.
3. CENTER THE OPERATING NUT IN THE MIDDLE OF THE FRAME AND COVER.
4. RESILIENT SEATED WEDGE GATE VALVES ARE MANDATORY UP TO 20". BUTTERFLY VALVES ARE ACCEPTABLE FOR SIZES 24" AND LARGER. SEE SD-9.
5. TWO CONCRETE ADJUSTING RINGS ARE ALLOWED WITH A TOTAL MAXIMUM ADJUSTMENT OF 9".

SD-8
IN-LINE GATE VALVE IN ROADWAY
05/01/2004 PRESSURE PIPE

SD-9 IN-LINE BUTTERFLY VALVE IN ROADWAYS

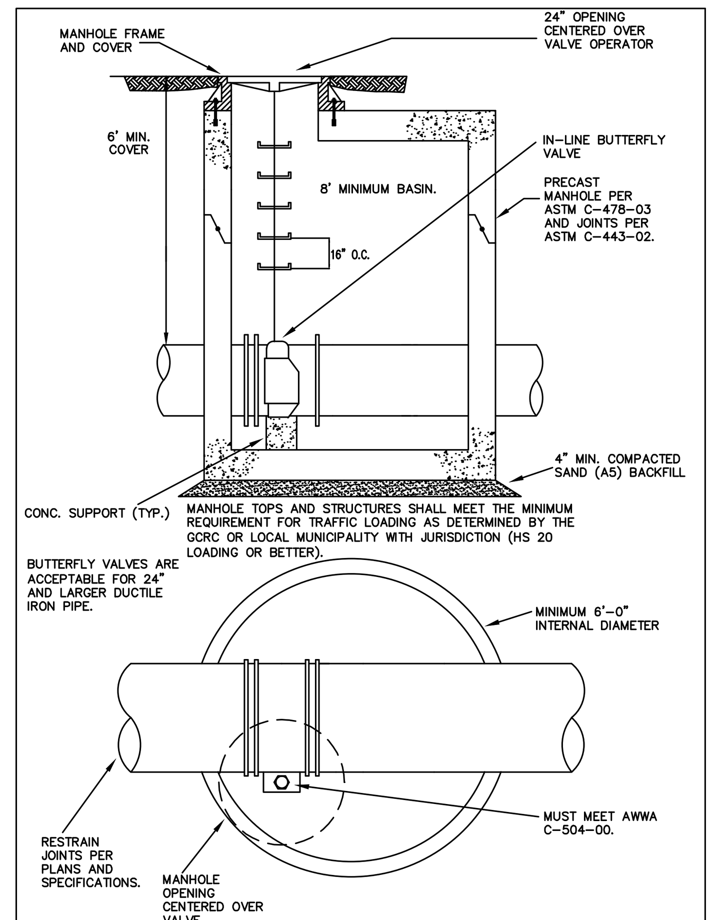

SD-9
IN-LINE BUTTERFLY VALVE IN ROADWAYS
05/01/2004 PRESSURE PIPE

SD-10 PRESSURE TAPPING SLEEVE AND VALVE

NOTES

1. PRESSURE TAPS 8" AND GREATER MUST BE INSTALLED IN A CONCRETE VALVE MANHOLE.
2. PRESSURE TAPS 6" AND UNDER MUST BE INSTALLED OVER A CONCRETE MANHOLE BASE @ APPROVED VALVE BOX.
3. ALL TAPPING SLEEVES SHALL BE MECHANICAL JOINT BY FLANGED OUTLET, ALL STAINLESS STEEL OR EPOXY COATED FABRICATED STEEL, BUILT IN TWO SECTIONS.
4. APPROVED MECHANICAL JOINT SLEEVE; ROMAC 452 ALL 316 STAINLESS STEEL, CLOW F5205, MUELLER H-615, AMERICAN DARLING H-1004, OR CITY OF BURTON APPROVED ALTERNATE.
5. THE OUTLET FLANGE IS CLASS 125 ANS/B16.1.
6. THE TAPPING TEE SHALL HAVE A BUILT-IN TEST PLUG.
7. THE GASKET FOR MAINLINE SHALL BE MADE FOR THE PIPE MATERIAL IN PLACE, DUCTILE IRON CLASS 52-54.
8. THE VALVE SHALL BE FLANGED BY RESTRAINED JOINT.
9. THE VALVE SHALL HAVE OVER SIZED SEAT RINGS TO PERMIT ENTRY OF THE TAPPING MACHINE CUTTERS.
10. THE VALVE SHALL MEET ALL REQUIREMENTS OF AWWA C509 OR C515.
11. THE TOP OPENING SHALL BE CENTERED ON THE VALVE OPERATING NUT.
12. SET MANHOLE FRAME AND COVER ON TOP OF SLAB.

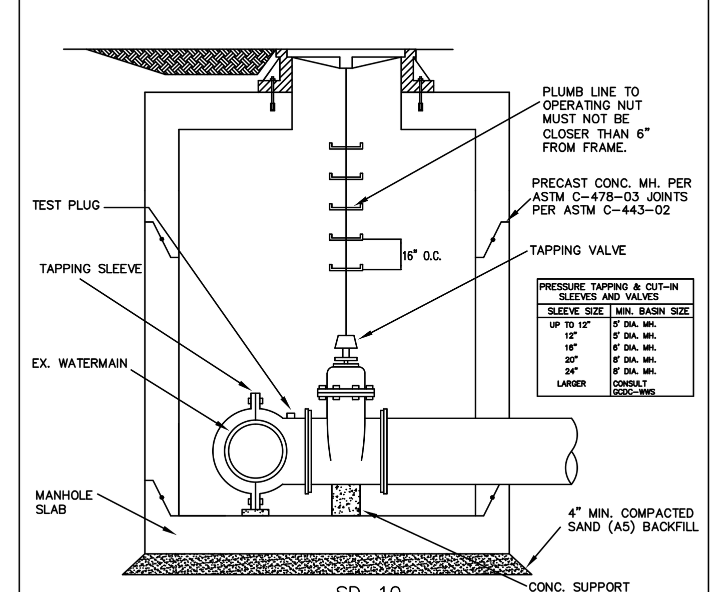

PRESSURE TAPPING & CUT-IN SLEEVES AND VALVES	
SLEEVE SIZE	MIN. BASIN SIZE
UP TO 12"	5' DIA. MH.
12"	5' DIA. MH.
16"	6' DIA. MH.
20"	8' DIA. MH.
24"	8' DIA. MH.
LARGER	CONSULT GCDC-WWS

SD-10
PRESSURE TAPPING SLEEVE AND VALVE
05/01/2004 PRESSURE PIPE

SD-11 FUTURE VALVE

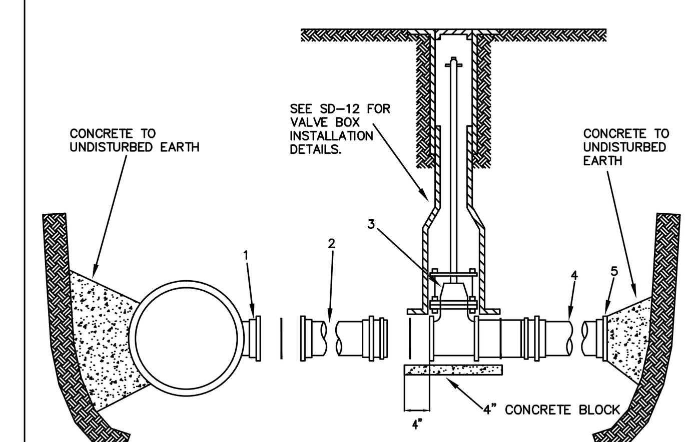

1. RESTRAINED JOINT MAINLINE TEE WITH RESTRAINED JOINT OUTLET.
2. ANCHORING COUPLING
3. RESILIENT SEATED GATE VALVE MJ X MJ.
4. EXTEND A MINIMUM OF ONE PIPE LENGTH AFTER THE VALVE.
5. RESTRAIN AND PLUG. PLACE A CONCRETE BRACE TO UNDISTURBED EARTH. CONCRETE SHALL NOT COVER PLUGS, BOLTS, ETC.
6. ALL FITTINGS SHALL HAVE AN APPROVED METHOD OF RESTRAINT, INCLUDING FITTINGS INSIDE THE MANHOLE.

SD-11
FUTURE VALVE
05/01/2004 PRESSURE PIPE

SD-12 VALVE BOX

ALL BURIED VALVES NOT ENCLOSED IN A VALVE VAULT SHALL BE POLYETHYLENE ENCASED. SEE SD-13.

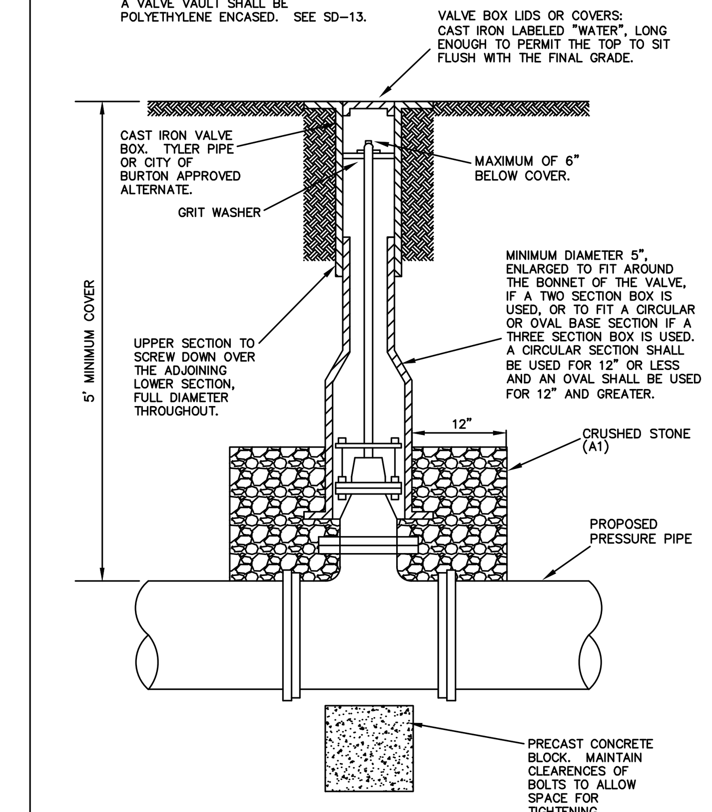

SD-12
VALVE BOX
05/01/2004 PRESSURE PIPE

SD-13 POLYETHYLENE TUBE WRAP FOR DUCTILE IRON PIPE

1. ALL PIPE SHALL BE WRAPPED, EXCEPT IN MANHOLES.
2. CIRCUMFERENTIAL WRAPS OF MANUFACTURER RECOMMENDED TAPE SHALL BE PLACED AT NO GREATER THAN FOUR FOOT INTERVALS ALONG THE BARREL OF THE PIPE WITH THE EXCESS FOLDED OVER THE TOP TO TAKE OUT EXCESS SLACK HELPING TO MINIMIZE THE SPACE BETWEEN THE POLYETHYLENE AND THE PIPE. COMPLETE THE INSTALLATION BY OVERLAPPING THE POLYETHYLENE TUBE WRAP AT EACH END AND SEAL ENDS PER AWWA C105/A21.5-99.

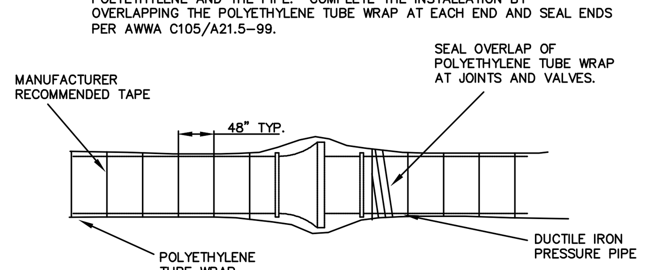

POLYETHYLENE WRAP: CROSS-LAMINATED HIGH DENSITY AND MANUFACTURED OF VIRGIN POLYETHYLENE MATERIAL CONFORMING TO THE REQUIREMENTS OF ASTM D-4976. RAW MATERIALS USED FOR THE FILM, ITS STRENGTH, THICKENS, TUBE SIZE, OR SHEET WIDTH MUST CONFORM TO AWWA C105/A21.5-99.

FOR ODD-SHAPED APPURTENANCES: WRAP VALVES, TEES, CROSSES, AND OTHER ODD-SHAPED PIECES WHICH CANNOT BE PRACTICALLY BE WRAPPED IN A TUBE, WITH A FLAT SHEET OR SPLIT LENGTH OF POLYETHYLENE TUBE, WITH A FLAT SHEET OR SPLIT LENGTH OF POLYETHYLENE TUBE. PASS THE SHEET UNDER THE APPURTENANCE AND BRING AROUND THE BODY. MAKE SEAMS BY BRINGING THE EDGES TOGETHER, FOLDING TWICE, AND TAPING DOWN. HANDLE SLACK WIDTH AND OVERLAP AT JOINTS AS DESCRIBED IN ASTM A 674-00 SECTION 5.2.1. TAPE POLYETHYLENE SECURELY IN PLACE AT VALVE STERN AND OTHER PENETRATIONS.

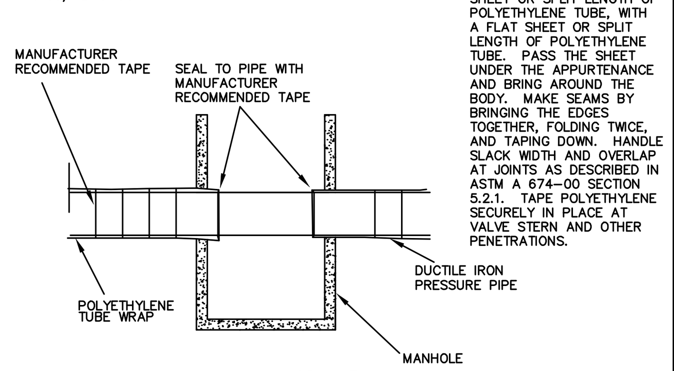

SD-13
POLYETHYLENE TUBE WRAP FOR DUCTILE IRON PIPE
05/01/2004 PRESSURE PIPE

SD-14 FIRE SUPPRESSION LINE VALVE & METER INSTALLATION

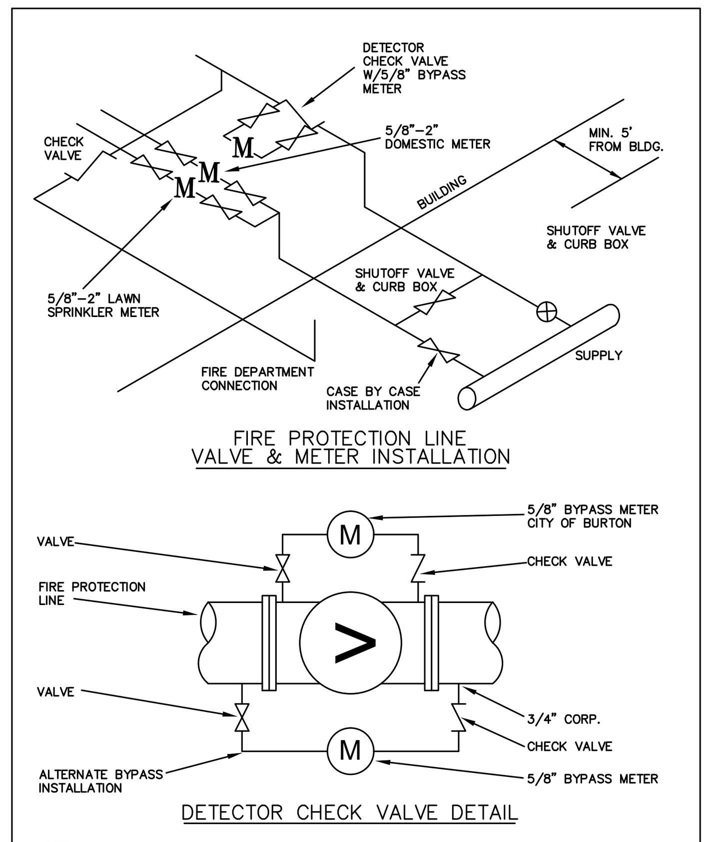

NOTE
DETECTOR CHECK VALVE SHALL BE MUELLER A-2500-602, OR CITY OF BURTON APPROVED ALTERNATE, TAPPED AT FACTORY FOR BYPASS METER.

SD-14
FIRE SUPPRESSION LINE VALVE & METER INSTALLATION
05/01/2004 (WATERMAIN ONLY) PRESSURE PIPE

SD-15 3/4" TO 2" WATER SERVICE CONNECTIONS

NOTES

1. WATER SERVICE SHALL BE TUNNELED UNDER EXISTING PAVEMENTS, SEE SD-7.
2. A 2"X4" WOODEN MARKER PLACED 1' UNDER THE FINISHED GRADE AND PAINTED BLUE IS REQUIRED FOR ALL WATER SERVICES NOT CONNECTED TO THE BUILDING.
3. THE VALVE BOX SHALL BE EITHER DUCTILE IRON OR CAST IRON AND A MINIMUM OF 6' IN LENGTH. NO PLASTIC CURB BOXES SHALL BE ALLOWED.
4. CURB STOPS SHALL BE BALL VALVES FOR ¾", 1", 1½", AND 2" DIAMETERS WITH COPPER TO COPPER CONNECTIONS.
5. THE CORPORATION SHALL BE FORD FS 202 OR GCDC-WWS APPROVED ALTERNATE. USE BRASS DOUBLE SADDLES WITH STAINLESS BANDS FOR 1½" AND 2" TAPS.
6. IF THE PUBLIC WATERMAIN IS ON AN EASEMENT, THE CURB STOP SHALL BE PLACED AT THE EDGE OF THE EASEMENT CLOSEST TO THE BUILDING TO BE SERVED.
7. WATER SERVICE IS TO BE PLACED AT THE CENTER OF FRONTAGE, WITH SANITARY SERVICE.

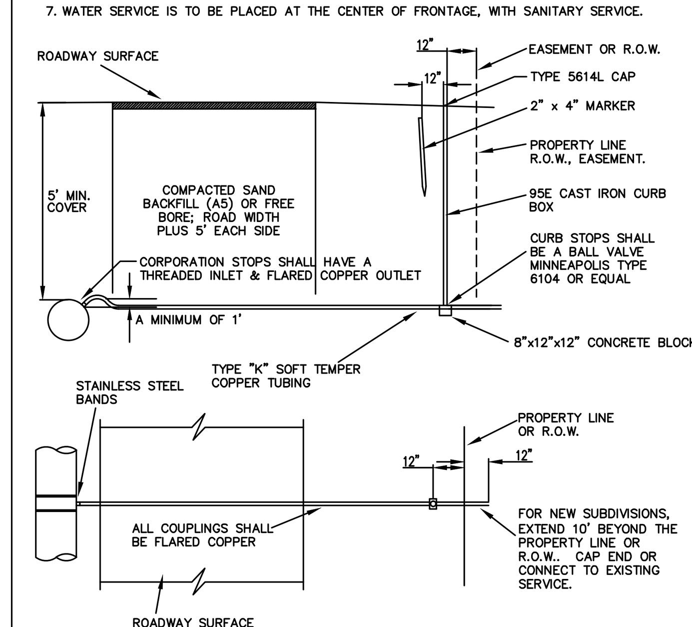

SD-15
3/4" TO 2" WATER SERVICE CONNECTIONS
05/01/2004 (WATERMAIN ONLY) PRESSURE PIPE

SD-16 FIRE HYDRANT DETAIL

NOTES

1. THE PUMPER NOZZLE SHALL FACE THE STREET. PROVIDE A MINIMUM OF 10 FEET, MEASURED FROM THE NOZZLE, CLEAR OF ANY OBSTRUCTIONS.
2. SET THE HYDRANT GRADE LINE AT PROPOSED GRADE OR AS FIELD DIRECTED.
3. SET THE VALVE BOX COVER FLUSH WITH THE EXISTING GRADE LEVEL.
4. ALL WORK FROM THE CENTERLINE OF THE MAIN, TO AND INCLUDING THE HYDRANT, SHALL BE PAID FOR BY THE UNIT PRICE BID ITEM FOR HYDRANTS.
5. ALL JOINTS SHALL BE RESTRAINED BY CITY OF BURTON APPROVED RESTRAINED JOINTS.
6. HYDRANT BARRELS ARE TO BE PAINTED YELLOW. CAPS WILL BE COLOR CODED TO MAIN SIZE: 6"-RED, 8"-ORANGE, 10" AND 12"-GREEN, 16" AND 20" -BROWN, 24" AND GREATER-BLUE.
7. 90° HYDRANT TEES ARE APPROVED WHERE SPACE REQUIREMENTS ARE LIMITED.
8. HYDRANT DRAIN SHALL BE PERMANENTLY SEALED AT THE FACTORY WITH A BRONZE PLUG.
9. THE HYDRANT SHOULD BE PLACED AT PROPERTY LINES AND WITHIN THE R.O.W. WHEN POSSIBLE..

HYDRANTS MUST MEET AWWA C502-94 AND SHALL BE EJIW 5BR OR MUELLER, MIN. 5' BURY.

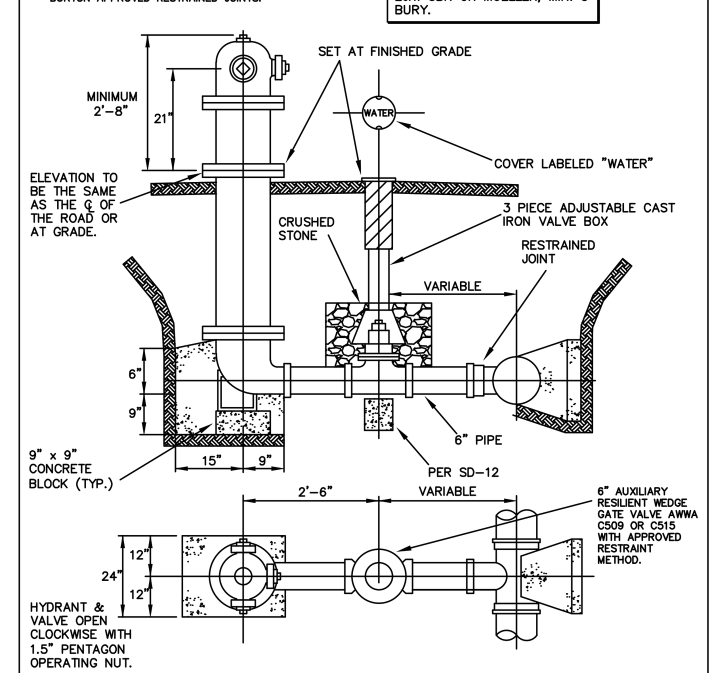

SD-16
FIRE HYDRANT DETAIL
05/01/2004 (WATERMAIN ONLY) PRESSURE PIPE

REVISIONS:
PER CITY OF BURTON COMMENTS, 12-7-04

DEPARTMENT OF PUBLIC WORKS
4093 MANOR DRIVE
BURTON, MICHIGAN 48519 PHONE: 742-9230

City of Burton

PRESSURE PIPE CONSTRUCTION STANDARD DETAILS

DWG. NAME: PRESSURE PIPE

Attachment: 16-17 (2254 : SPR #16-17)

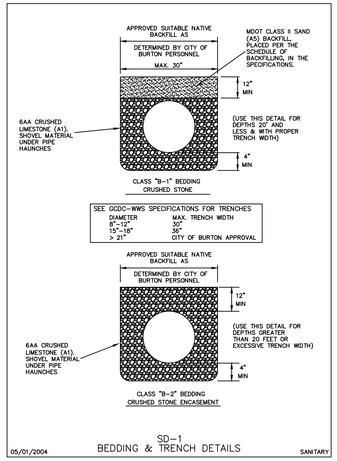

SD-1
BEDDING & TRENCH DETAILS

05/01/2004 SANITARY

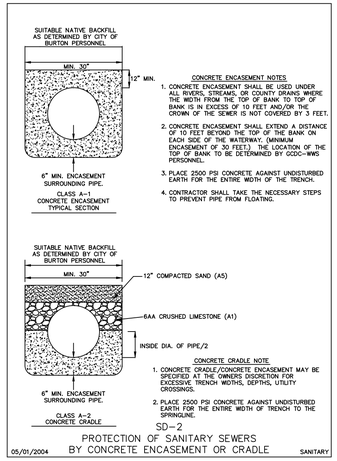

SD-2
PROTECTION OF SANITARY SEWERS
BY CONCRETE ENCASEMENT OR CRADLE

05/01/2004 SANITARY

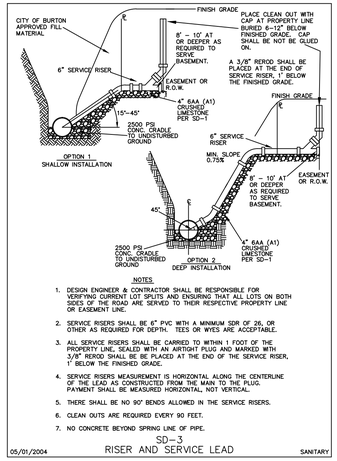

NOTES

1. DESIGN ENGINEER & CONTRACTOR SHALL BE RESPONSIBLE FOR VERIFYING CURRENT LOT SPLITS AND ENSURING THAT ALL LOTS ON BOTH SIDES OF THE ROAD ARE SERVED TO THEIR RESPECTIVE PROPERTY LINE OR EASEMENT LINE.
2. SERVICE RISERS SHALL BE 6" PVC WITH A MINIMUM SDR OF 26, OR OTHER AS REQUIRED FOR DEPTH. TEES OR WYES ARE ACCEPTABLE.
3. ALL SERVICE RISERS SHALL BE CAPPED TO WITHIN 1 FOOT OF THE PROPERTY LINE, SEALED WITH AN AIRTIGHT PLUG AND MARKED WITH 3/8" REROD SHALL BE BE PLACED AT THE END OF THE SERVICE RISER, 1' BELOW THE FINISHED GRADE.
4. SERVICE RISERS MEASUREMENT IS HORIZONTAL ALONG THE CENTERLINE OF THE LEAD AS CONSTRUCTED FROM THE MAIN TO THE PLUG. PAYMENT SHALL BE MEASURED HORIZONTAL, NOT VERTICAL.
5. THERE SHALL BE NO 90° BENDS ALLOWED IN THE SERVICE RISERS.
6. CLEAN OUTS ARE REQUIRED EVERY 90 FEET.
7. NO CONCRETE BEYOND SPRING LINE OF PIPE.

SD-3
RISER AND SERVICE LEAD

05/01/2004 SANITARY

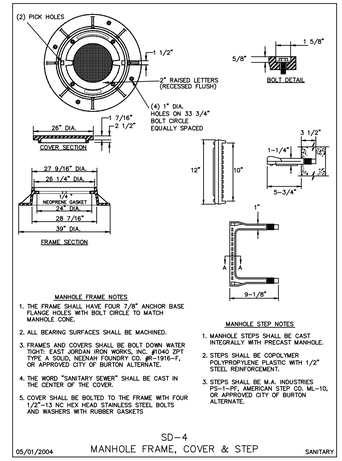

MANHOLE FRAME NOTES

1. THE FRAME SHALL HAVE FOUR 7/8" ANCHOR BASE FLANGE HOLES WITH BOLT CIRCLE TO MATCH MANHOLE CONE.
2. ALL BEARING SURFACES SHALL BE MACHINED.
3. FRAMES AND COVERS SHALL BE BOLT DOWN WATER TIGHT: EAST JORDAN IRON WORKS, INC. #1040 ZPT TYPE A SOLID, NEENAH FOUNDRY CO. #R-1916-F, OR APPROVED CITY OF BURTON ALTERNATE.
4. THE WORD "SANITARY SEWER" SHALL BE CAST IN THE CENTER OF THE COVER.
5. COVER SHALL BE BOLTED TO THE FRAME WITH FOUR 1/2"-13 NC HEX HEAD STAINLESS STEEL BOLTS AND WASHERS WITH RUBBER GASKETS

MANHOLE STEP NOTES

1. MANHOLE STEPS SHALL BE CAST INTEGRALLY WITH PRECAST MANHOLE.
2. STEPS SHALL BE COPOLYMER POLYPROPYLENE PLASTIC WITH 1/2" STEEL REINFORCEMENT.
3. STEPS SHALL BE M.A. INDUSTRIES PS-1-PF, AMERICAN STEP CO. ML-10, OR APPROVED CITY OF BURTON ALTERNATE.

SD-4
MANHOLE FRAME, COVER & STEP

05/01/2004 SANITARY

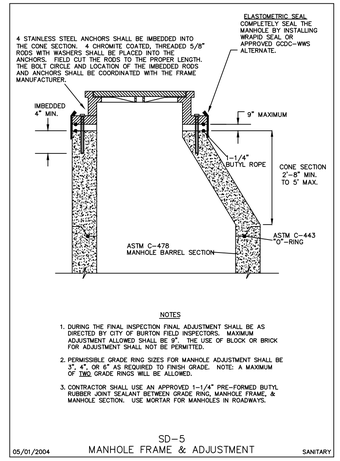

NOTES

1. DURING THE FINAL INSPECTION FINAL ADJUSTMENT SHALL BE AS DIRECTED BY CITY OF BURTON FIELD INSPECTORS. MAXIMUM ADJUSTMENT ALLOWED SHALL BE 9". THE USE OF BLOCK OR BRICK FOR ADJUSTMENT SHALL NOT BE PERMITTED.
2. PERMISSIBLE GRADE RING SIZES FOR MANHOLE ADJUSTMENT SHALL BE 3", 4", OR 6" AS REQUIRED TO FINISH GRADE. NOTE: A MAXIMUM OF TWO GRADE RINGS WILL BE ALLOWED.
3. CONTRACTOR SHALL USE AN APPROVED 1-1/4" PRE-FORMED BUTYL RUBBER JOINT SEALANT BETWEEN GRADE RING, MANHOLE FRAME, & MANHOLE SECTION. USE MORTAR FOR MANHOLES IN ROADWAYS.

SD-5
MANHOLE FRAME & ADJUSTMENT

05/01/2004 SANITARY

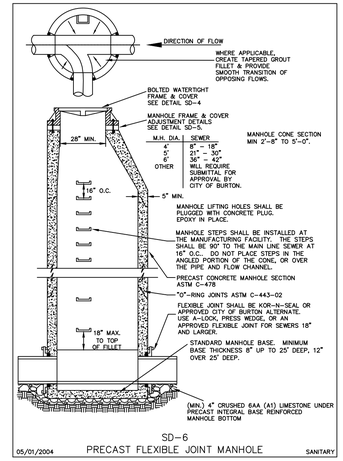

SD-6
PRECAST FLEXIBLE JOINT MANHOLE

05/01/2004 SANITARY

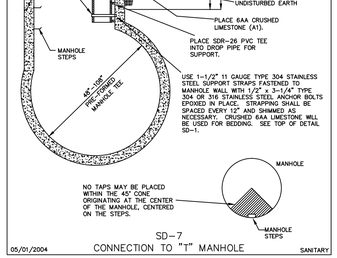

SD-7
CONNECTION TO "T" MANHOLE

05/01/2004 SANITARY

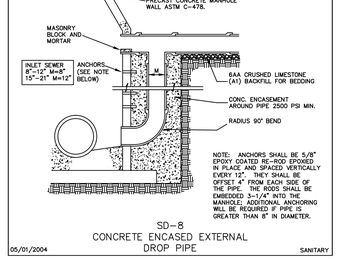

SD-8
CONCRETE ENCASED EXTERNAL
DROP PIPE

05/01/2004 SANITARY

NOTES

1. ALL SANITARY SEWERS SHALL BE TESTED FOR INFILTRATION.
2. A NEW INFILTRATION TEST MANHOLE MUST BE CONSTRUCTED FOR EACH SEPARATE DIVISION OR SECTION OF A PROJECT. (SEE DETAIL)
3. NO CONNECTION SHALL BE MADE TO THE EXISTING SANITARY SEWER SYSTEM UNTIL ALL TESTING OF THE SEWER HAS BEEN PERFORMED AND APPROVED BY CITY OF BURTON PERSONNEL.
4. TESTING WEIRS ARE AVAILABLE FROM GCDC-WWS WITH PRIOR NOTICE. ALL EXTENSIONS OF 8"-21" SEWER SHALL BE AIR TESTED. ALL LINES 24" AND LARGER SHALL BE TESTED WITH A "V" NOTCH WEIR.

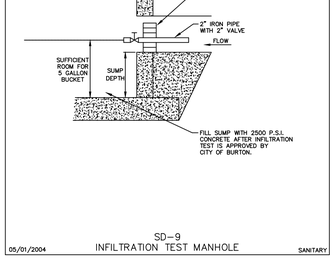

SD-9
INFILTRATION TEST MANHOLE

05/01/2004 SANITARY

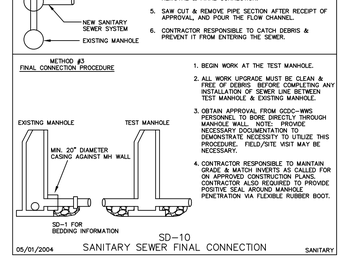

SD-10
SANITARY SEWER FINAL CONNECTION

05/01/2004 SANITARY

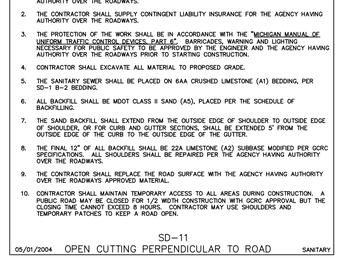

SPECIAL REQUIREMENTS FOR OPEN CUTTING HARD SURFACE AND/OR GRAVEL ROADS

1. THE CONTRACTOR SHALL ACQUIRE A SPECIAL OPEN CUT APPROVAL FROM THE AGENCY HAVING AUTHORITY OVER THE ROADWAYS.
2. THE CONTRACTOR SHALL SUPPLY CONTINGENT LIABILITY INSURANCE FOR THE AGENCY HAVING AUTHORITY OVER THE ROADWAYS.
3. THE PROTECTION OF THE WORK SHALL BE IN ACCORDANCE WITH THE "MICHIGAN MANUAL OF UNIFORM TRAFFIC CONTROL DEVICES, PART 6" BARRICADES, WARNING AND LIGHTING NECESSARY FOR PUBLIC SAFETY TO BE APPROVED BY THE ENGINEER AND THE AGENCY HAVING AUTHORITY OVER THE ROADWAYS PRIOR TO STARTING CONSTRUCTION.
4. CONTRACTOR SHALL EXCAVATE ALL MATERIAL TO PROPOSED GRADE.
5. THE SANITARY SEWER SHALL BE PLACED ON 6AA CRUSHED LIMESTONE (A1) BEDDING, PER SD-1 B-2 BEDDING.
6. ALL BACKFILL SHALL BE MDOT CLASS II SAND (A5), PLACED PER THE SCHEDULE OF BACKFILLING.
7. THE SAND BACKFILL SHALL EXTEND FROM THE OUTSIDE EDGE OF SHOULDER TO OUTSIDE EDGE OF SHOULDER, OR FOR CURB AND GUTTER SECTIONS, SHALL BE EXTENDED 5' FROM THE OUTSIDE EDGE OF THE CURB TO THE OUTSIDE EDGE OF THE GUTTER.
8. THE FINAL 12" OF ALL BACKFILL SHALL BE 22A LIMESTONE (A2) SUBBASE MODIFIED PER GCRC SPECIFICATIONS. ALL SHOULDERS SHALL BE REPAIRED PER THE AGENCY HAVING AUTHORITY OVER THE ROADWAYS.
9. THE CONTRACTOR SHALL REPLACE THE ROAD SURFACE WITH THE AGENCY HAVING AUTHORITY OVER THE ROADWAYS APPROVED MATERIAL.
10. CONTRACTOR SHALL MAINTAIN TEMPORARY ACCESS TO ALL AREAS DURING CONSTRUCTION. A PUBLIC ROAD MAY BE CLOSED FOR 1/2 WIDTH CONSTRUCTION WITH GCRC APPROVAL BUT THE CLOSING TIME CANNOT EXCEED 8 HOURS. CONTRACTOR MAY USE SHOULDERS AND TEMPORARY PATCHES TO KEEP A ROAD OPEN.

SD-11
OPEN CUTTING PERPENDICULAR TO ROAD

05/01/2004 SANITARY

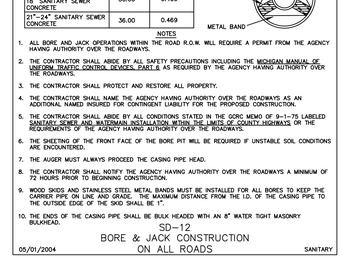

SIZE AND MATERIAL	MIN. CASING DIA. O.D. INCHES	MIN. WALL THICKNESS INCHES
8" D.I. PRESSURE PIPE OR SMALLER	12.75	0.375
8" SANITARY SEWER V.C.P. OR P.V.C.		
10"-12" D.I. PRESSURE	20.00	0.375
8"-10" SANITARY SEWER		
16" D.I. PRESSURE PIPE	24.00	0.375
12"-15" SANITARY SEWER		
18"-24" D.I. PRESSURE	30.00	0.406
18" SANITARY SEWER CONCRETE		
21"-24" SANITARY SEWER CONCRETE	36.00	0.469

NOTES

1. ALL BORE AND JACK OPERATIONS WITHIN THE ROAD R.O.W. WILL REQUIRE A PERMIT FROM THE AGENCY HAVING AUTHORITY OVER THE ROADWAYS.
2. THE CONTRACTOR SHALL ABIDE BY ALL SAFETY PRECAUTIONS INCLUDING THE MICHIGAN MANUAL OF UNIFORM TRAFFIC CONTROL DEVICES, PART 6 AS REQUIRED BY THE AGENCY HAVING AUTHORITY OVER THE ROADWAYS.
3. THE CONTRACTOR SHALL PROTECT AND RESTORE ALL PROPERTY.
4. THE CONTRACTOR SHALL NAME THE AGENCY HAVING AUTHORITY OVER THE ROADWAYS AS AN ADDITIONAL NAMED INSURED FOR CONTINGENT LIABILITY FOR THE PROPOSED CONSTRUCTION.
5. THE CONTRACTOR SHALL ABIDE BY ALL CONDITIONS STATED IN THE GCRC MEMO OF 9-1-75 LABELED SANITARY SEWER AND WATERMAIN INSTALLATION WITHIN THE LIMITS OF COUNTY HIGHWAYS OR THE REQUIREMENTS OF THE AGENCY HAVING AUTHORITY OVER THE ROADWAYS.
6. THE SHEETING OF THE FRONT FACE OF THE BORE PIT WILL BE REQUIRED IF UNSTABLE SOIL CONDITIONS ARE ENCOUNTERED.
7. THE AUGER MUST ALWAYS PROCEED THE CASING PIPE HEAD.
8. THE CONTRACTOR SHALL NOTIFY THE AGENCY HAVING AUTHORITY OVER THE ROADWAYS A MINIMUM OF 72 HOURS PRIOR TO BEGINNING CONSTRUCTION.
9. WOOD SKIDS AND STAINLESS STEEL METAL BANDS MUST BE INSTALLED FOR ALL BORES TO KEEP THE CARRIER PIPE ON LINE AND GRADE. THE MAXIMUM DISTANCE FROM THE I.D. OF THE CASING PIPE TO THE OUTSIDE EDGE OF THE SKID SHALL BE 1".
10. THE ENDS OF THE CASING PIPE SHALL BE BULK HEADED WITH AN 8" WATER TIGHT MASONRY BULKHEAD.

SD-12
BORE & JACK CONSTRUCTION
ON ALL ROADS

05/01/2004 SANITARY

GENERAL NOTES FOR
SANITARY SEWER CONSTRUCTION

1. ALL SANITARY SEWER SHALL BE TELEVISED AND VIDEOTAPED BY CITY OF BURTON WITH REPORTS SUBMITTED TO GCDC-WWS.
2. ALL PVC MAINLINE PIPE IS TO BE MANDRELLED BY A 9-SIDED MANDREL MEETING CITY OF BURTON SPECIFICATIONS. THE MAXIMUM ALLOWABLE DEFLECTION IS 5%.
3. EACH 6" SERVICE CONNECTION SHALL BE STAKED, WITH AN INVERT ELEVATION, BY THE FIELD ENGINEER.
4. ALL PROJECTS SHALL HAVE A MANDATORY PRE-CONSTRUCTION MEETING WITH THE CITY OF BURTON AND GCDC-WWS.

REVISIONS:
PER CITY OF BURTON COMMENTS, 12-7-04

DEPARTMENT OF PUBLIC WORKS
4093 MANOR DRIVE
BURTON, MICHIGAN 48519 PHONE: 742-9230

City of Burton

SANITARY SEWER CONSTRUCTION STANDARD DETAILS

DWG. NAME: SANITARY DETAILS

Attachment: 16-17 (2254 : SPR #16-17)

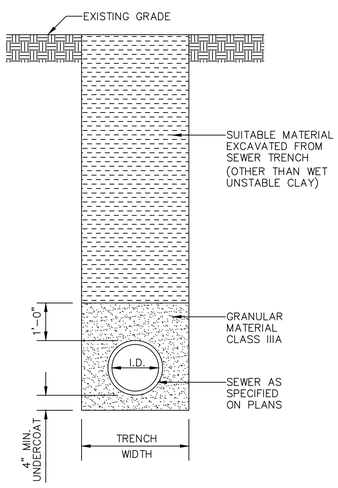

SEWER NOT UNDER ROADBED

(NOT TO SCALE)

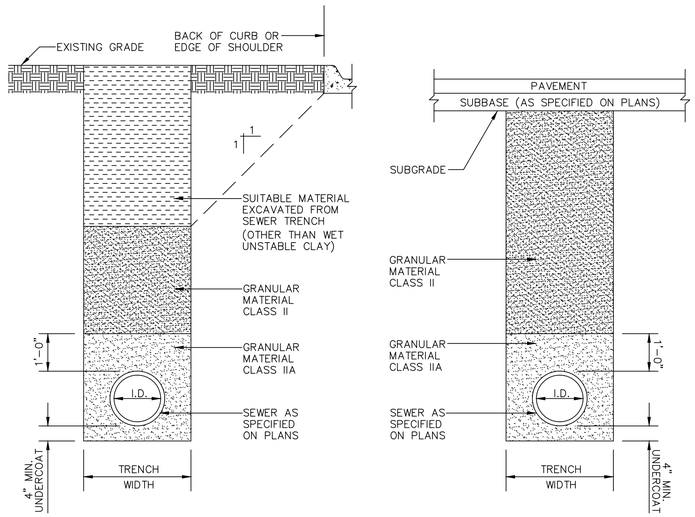

SEWER UNDER ROADBED OR WITHIN INFLUENCE OF ROADBED

(NOT TO SCALE)

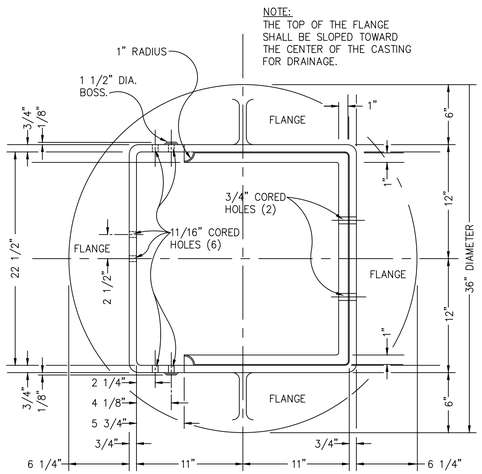

EAST JORDAN COVER 7065

(NOT TO SCALE)

STORM SEWER GENERAL NOTES

1. ALL PRECAST MANHOLE AND CATCH BASIN COMPONENTS SHALL BE IN ACCORDANCE WITH A.S.T.M. C478 CURRENT EDITION.
2. CONE SECTIONS SHALL BE ECCENTRIC CONE SECTIONS AS SHOWN. CONCENTRIC CONES AND FLAT SLAB TOPS MAY BE SUBSTITUTED ONLY UPON RECIEPT OF PRIOR WRITTEN APPROVAL FROM THE ENGINEER. MINIMUM CONE HEIGHTS SHALL BE AS SHOWN. SHORTER CONES MAY BE SUBSTITUTED ONLY UPON RECIEPT OF PRIOR WRITTEN APPROVAL FROM THE OWNER. SHORTER CONES SHALL BE FABRICATED IN ACCORDANCE WITH M.D.O.T. STANDARD PLANS, CURRENT EDITION. CONES SHALL BE FURNISHED WITH 4 5/8" DIA. THREADED INSERTS CAST INTEGRALLY WITH ALL FRAMES.
3. SPACING BETWEEN PIPE OPENINGS IN A RISER SHALL BE 6" MINIMUM. OPENINGS MAY BE CONSTRUCTED BY CASTING, REMOVING THE GREEN CONCRETE, OR BY DRILLING THE OPENINGS IN CURED CONCRETE.
4. THE TOP OF PRECAST STRUCTURES SHALL BE SUFFICIENTLY LOW TO PERMIT PROPER ADJUSTMENT OF COVER TO GRADE WITH MORTAR.
5. M.D.O.T. GRANULAR MATERIAL CLASS II COMPACTED TO 95% DENSITY SHALL BE USED IN BACKFILLING AROUND ALL STRUCTURES THAT FALL WITHIN THE 1 ON 1 INFLUENCE LINES FROM THE EDGE OF PAVEMENT OR BACK OF CURB OR FROM STRUCTURE FOOTINGS.
6. CAST IN PLACE AND PRECAST CONCRETE BOTTOMS (FOOTINGS) SHALL BE REINFORCED WITH A MINIMUM OF #4 STEEL BARS SPACED AT 1'-0" BOTH WAYS OR WITH TWO LAYERS OF WELDED WIRE FABRIC OF EQUIVALENT CROSS SECTIONAL AREA LAID AT RIGHT ANGLES AND WIRED TOGETHER. REINFORCEMENT SHALL BE PLACED IN TOP OF FOOTING AND TOP OF FOOTING SHALL BE MARKED. PROVIDE 3" CLEARANCE FOR REINFORCING. FOOTINGS SHALL BE SUPPORTED BY A COMPACTED 6" MINIMUM GRANULAR SUBBASE.
7. PRECAST BOTTOMS SHALL BE SET LEVEL AND A MINIMUM OF 2" BELOW THE BOTTOM OF THE SEWER.
8. THE BELL SHALL BE REMOVED FOR THE FIRST LENGTH OF OUTLET PIPE PROJECTING THRU THE WALL OF THE MANHOLE.
9. POUR 30M CONCRETE UNDER SEWER PIPE FROM UNDISTURBED SOIL TO THE PIPE SPRING LINE. THE MINIMUM WIDTH OF CONCRETE SHALL BE O.D. + 12".
10. MORTAR FOR BRICK, BLOCK AND PARGING, POINTING AND BEDDING OF CASTING FRAMES SHALL BE IN ACCORDANCE WITH M.D.O.T. STANDARD SPECIFICATIONS FOR MORTAR TYPE II.
11. ALL LIFT PIN HOLES SHALL BE FILLED WITH MORTAR.
12. ALL BRICK AND BLOCK USED IN MANHOLE AND CATCH BASIN CONSTRUCTION SHALL BE SOLID.
13. ALL MANHOLE AND CATCH BASIN RIM ADJUSTMENTS WITHIN THE INFLUENCE OF THE ROAD WAY SHALL BE CONSTRUCTED WITH SOLID CONCRETE RINGS.
14. MANHOLE AND CATCH BASIN DIAMETERS (EXCEPT WHERE OTHERWISE NOTED):

PIPE DIA.	REQUIRED M.H. & C.B. DIA.	MINIMUM PRECAST WALL THICKNESS
24" OR LESS	4'-0"	5"
27" THRU 36"	5'-0"	6"
42" & 48"	6'-0"	7"
54" THRU 72"	8'-0"	8"

15. STEPS SHALL BE INSTALLED IN ALL STRUCTURES MORE THAN 4' DEEP AND SHALL HAVE A MINIMUM 3" EMBEDMENT. STEPS SHALL BE FABRICATED OF CAST IRON, MEETING THE REQUIREMENTS OF A.A.S.H.T.O. M105 CLASS NO. 35 OR COPOLYMER POLYPROPYLENE PLASTIC WITH 1/2" STEEL REINFORCEMENT, AND SHALL BE CAST INTEGRALLY WITH THE STRUCTURE. STEPS SHALL BE DESIGNED IN ACCORDANCE WITH CURRENT O.S.H.A. REGULATIONS AND SHALL NOT BE LESS THAN 10" CLEAR LENGTH. STEPS SHALL BE CAPABLE OF SUPPORTING 300 LBS. AND COATED WITH COAL TAR PITCH VARNISH. STEPS SHALL NOT BE PLACED OVER ANY SEWER CHANNEL.
16. FRAME AND COVER CASTING SHOP DRAWINGS SHALL BE APPROVED BY THE CITY OF BURTON PRIOR TO MANUFACTURING.
17. THE MANHOLE FRAME AND COVER SHALL MEET THE REQUIREMENTS OF THE CURRENT STANDARD SPECIFICATIONS FOR GRAY-IRON CASTINGS A.A.S.H.T.O. M105, AND SHALL HAVE A MINIMUM STRENGTH AS PROVIDED FOR CLASS NO. 30 GRAY IRON CASTINGS.
18. ALL PIPES SHALL BE RUBBER GASKET JOINT IN ACCORDANCE WITH MDOT SPECIFICATION 909.03.
19. STORM SEWER SHALL BE TELEVISED PER SANITARY SEWER NOTE NO. 10, SHEET 3.
20. ALL 4" STORM LEADS WILL BE CORED AND BOOTED.

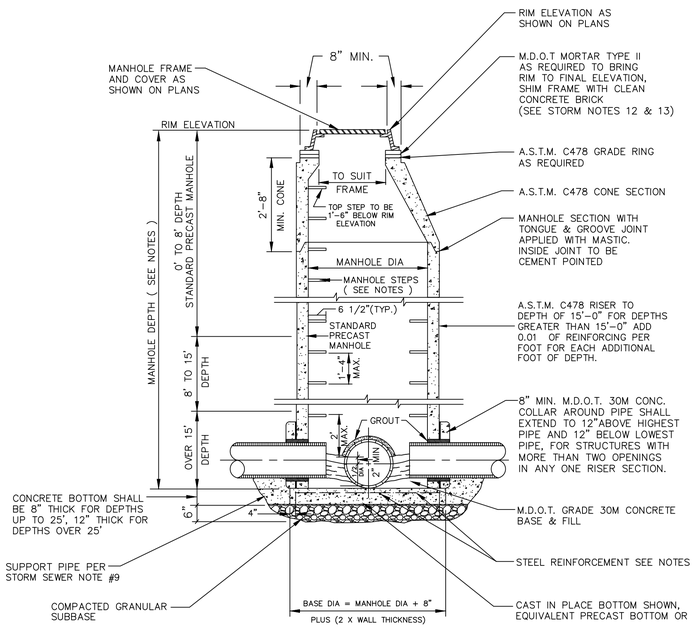

STANDARD PRECAST CONCRETE STORM SEWER MANHOLE

(NOT TO SCALE)

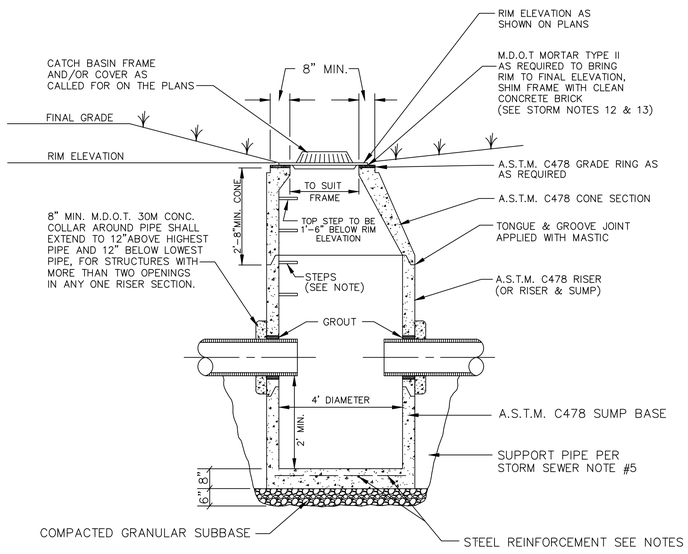

STANDARD PRECAST CONCRETE CATCH BASIN

(NOT TO SCALE)

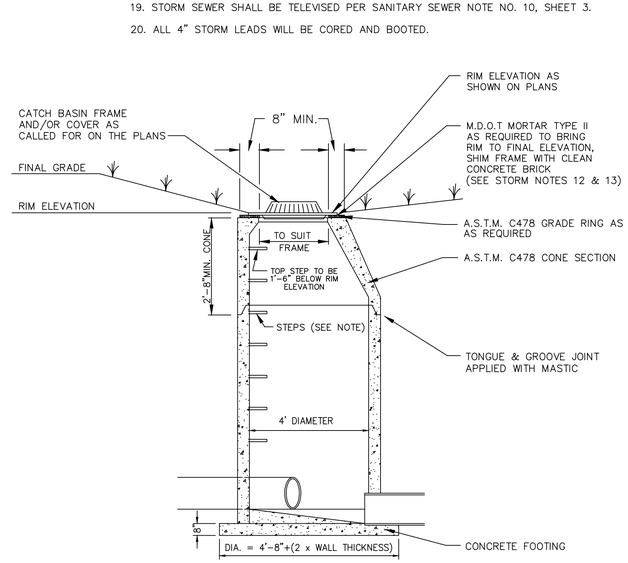

STANDARD PRECAST CONCRETE INLET

(NOT TO SCALE)

REVISIONS:
PER CITY OF BURTON COMMENTS, 12-7-04

DEPARTMENT OF PUBLIC WORKS
4093 MANOR DRIVE
BURTON, MICHIGAN 48519 PHONE: 742-9230

City of Burton

STORM SEWER STANDARD DETAILS AND NOTES

DWG. NAME: STMSTAN

Attachment: 16-17 (2254 : SPR #16-17)

michigan unified keying system (modified)

✳ indicates applicability of a specific control measure to one or more of the seven problem areas

KEY	DETAIL	CHARACTERISTICS	SLOPES A	STREAMS AND WATERWAYS B	SURFACE DRAINAGEWAYS C	ENCLOSED DRAINAGE (Inlet & Outfall Control) D	LARGE FLAT SURFACE AREAS E	BORROW AND STOCKPILE AREAS F	ADJACENT PROPERTIES G
1	Dust Control – No Detail –	DUST CONTROL APPLICATIONS CAN INCLUDE WATERING, CHEMICAL DUST SUPPRESSION, GRAVEL OR ASPHALT SURFACING, TEMPORARY AGGREGATE COVER AND HAUL TRUCK COVERS	✳				✳	✳	
2	Selective Grading & Shaping	WATER CAN BE DIVERTED TO MINIMIZE EROSION FLATTER SLOPES EASE EROSION PROBLEMS	✳				✳	✳	✳
3	Grubbing Omitted	SAVES COST OF GRUBBING, PROVIDES NEW SPROUTS RETAINS EXISTING ROOT MAT SYSTEM, REDUCES WIND FALL AT NEW FOREST EDGE. DISCOURAGES EQUIPMENT ENTRANCE	✳				✳		✳
4	Vegetative Stabilization	MAY UTILIZE A VARIETY OF PLANT MATERIAL STABILIZES SOIL SLOWS RUNOFF VELOCITY FILTERS SEDIMENT FROM RUNOFF	✳	✳	✳		✳	✳	✳
5	AVAILABLE DETAIL								
6	Seeding with Mulch Blanket and/or Matting	FACILITATES ESTABLISHMENT OF VEGETATIVE COVER EFFECTIVE FOR DRAINAGEWAYS WITH LOW VELOCITY EASILY PLACED IN SMALL QUANTITIES BY INEXPERIENCED PERSONNEL, SHOULD INCLUDE PREPARED TOPSOIL BED	✳		✳			✳	✳
7	AVAILABLE DETAIL								
8	Sodding	PROVIDES IMMEDIATE PROTECTION CAN BE USED ON STEEP SLOPES WHERE SEED MAY BE DIFFICULT TO ESTABLISH. EASY TO PLACE; MAY BE REPAIRED IF DAMAGED SHOULD INCLUDE PREPARED TOPSOIL BED	✳		✳		✳	✳	✳
9	Vegetative Buffer Strip	SLOWS RUNOFF VELOCITY FILTERS SEDIMENT FROM RUNOFF REDUCES VOLUME OF RUNOFF ON SLOPES	✳	✳					✳
10	Mulching	USED ALONE TO PROTECT EXPOSED AREAS FOR SHORT PERIODS PROTECTS SOIL FROM IMPACT OF FALLING RAIN PRESERVES SOIL MOISTURE AND PROTECTS GERMINATING SEED FROM TEMPERATURE EXTREMES	✳				✳	✳	
11	Roughened Surface	REDUCES VELOCITY AND INCREASES INFILTRATION RATES COLLECTS SEDIMENT HOLDS WATER, SAND AND MULCH BETTER THAN SMOOTH SURFACES	✳				✳		
12	AVAILABLE DETAIL								
13	Riprap, Rubble, Gabions	USED WHERE VEGETATION IS NOT EASILY ESTABLISHED EFFECTIVE FOR HIGH VELOCITIES OR HIGH CONCENTRATIONS PERMITS RUNOFF TO INFILTRATE SOIL DISSIPATES ENERGY FLOW AT SYSTEM OUTLETS	✳	✳	✳				
14	AVAILABLE DETAIL								
15	AVAILABLE DETAIL								
16	AVAILABLE DETAIL								
17	Benches	REDUCES RUNOFF VELOCITY BY REDUCING EFFECTIVE SLOPE LENGTH COLLECTS SEDIMENT, PROVIDES ACCESS TO SLOPES FOR SEEDING, MULCHING AND MAINTENANCE	✳					✳	
18	Earth Diversion Berm	DIVERTS WATER FROM VULNERABLE AREAS COLLECTS AND DIRECTS WATER TO PREPARED DRAINAGEWAYS MAY BE PLACED AS PART OF NORMAL CONSTRUCTION OPERATION	✳					✳	✳
18A	Earth Diversion Berm With Stone Outlet at Ditch	DIVERTS WATER FROM VULNERABLE AREAS COLLECTS AND DIRECTS WATER TO PREPARED DRAINAGEWAYS MAY BE PLACED AS PART OF NORMAL CONSTRUCTION OPERATION	✳					✳	✳
19	Diversion Ditch	COLLECTS AND DIVERTS WATER TO REDUCE EROSION POTENTIAL MAY BE INCORPORATED IN PERMANENT PROJECT DRAINAGE SYSTEMS	✳					✳	✳
20	Diversion Berm & Ditch	DIVERTS WATER TO A PREPARED DRAINAGEWAY MAY BE USED AT INTERVALS ACROSS SLOPE FACE TO REDUCE EFFECTIVE SLOPE LENGTH	✳					✳	✳
21	Stone Filter Berm	CONSTRUCTED OF GRAVEL OR STONE INTERCEPTS AND DIVERTS RUNOFF TO STABILIZED AREAS OR PREPARED DRAINAGE SYSTEMS SLOWS RUNOFF AND COLLECTS SEDIMENT	✳	✳					✳
21A	Stone Filter Berm with Silt Fence	CONSTRUCTED OF GRAVEL OR STONE INTERCEPTS AND DIVERTS RUNOFF TO STABILIZED AREAS OR PREPARED DRAINAGE SYSTEMS SLOWS RUNOFF AND COLLECTS SEDIMENT – SILT FENCE PREVENTS EROSION AROUND SPILLWAY	✳	✳					✳
22	AVAILABLE DETAIL								
23	AVAILABLE DETAIL								
24	Grassed Waterway	MUCH MORE STABLE FORM OF DRAINAGEWAY THAN BARE CHANNEL GRASS TENDS TO SLOW RUNOFF AND FILTER OUT SEDIMENT USED WHERE BARE CHANNEL WOULD BE ERODED			✳				
25	Slope Drain (Surface Pipe)	PREVENTS EROSION ON SLOPES WHEN RUNOFF CANNOT BE DIVERTED TO EDGES OF SLOPE AREA. USUALLY TEMPORARY CAN BE CONSTRUCTED OR EXTENDED AS GRADING PROGRESSES	✳						
26	Slope Drain – Paved Chute/Flume	PREVENTS EROSION ON SLOPES WHEN RUNOFF CANNOT BE DIVERTED TO EDGE OF SLOPE AREA. USUALLY PERMANENT CAN BE CONSTRUCTED OR EXTENDED AS GRADING PROGRESSES	✳						
27	Slope Drain (Subsurface Pipe)	PREVENTS EROSION ON SLOPES WHEN RUNOFF CANNOT BE DIVERTED TO EDGE OF SLOPE AREA. USUALLY PERMANENT CAN BE CONSTRUCTED AS GRADING PROGRESSES	✳						
28	Drop Spillway	SLOWS VELOCITY OF FLOW, REDUCING EROSIVE CAPACITY		✳	✳				
29	Pipe Drop	REDUCES RUNOFF VELOCITY REMOVES SEDIMENT AND TURBIDITY CAN BE DESIGNED TO HANDLE LARGE VOLUMES OF FLOW			✳				
30	Pipe Spillway	REMOVES SEDIMENT AND TURBIDITY FROM RUNOFF MAY BE PART OF PERMANENT EROSION CONTROL PLAN			✳				
31	Energy Dissipater	SLOWS RUNOFF VELOCITY TO NON-EROSIVE LEVEL PERMITS SEDIMENT COLLECTION FROM RUNOFF	✳		✳	✳			
32	Level Spreader	CONVERTS COLLECTED CHANNEL OR PIPE FLOW BACK TO SHEET FLOW AVOIDS CHANNEL EASEMENTS AND CONSTRUCTION OFF PROJECT SITE SIMPLE TO CONSTRUCT			✳				
33	Sediment Trap	MAY BE CONSTRUCTED OF A VARIETY OF MATERIALS TRAPS SEDIMENT AND REDUCES VELOCITY OF FLOW CAN BE CLEANED AND EXPANDED AS NEEDED		✳	✳				
34	Sediment Basin	TRAPS SEDIMENT RELEASES RUNOFF AT NON-EROSIVE RATES CONTROLS RUNOFF AT SYSTEM OUTLETS CAN BE VISUAL AMENITIES		✳	✳	✳			
35	AVAILABLE DETAIL								
36	Catch Basin Inlet Protection	COLLECTS HIGH VELOCITY CONCENTRATED RUNOFF MAY USE FILTER CLOTH OVER INLET					✳		✳
37	Sod Filter	INEXPENSIVE AND EASY TO CONSTRUCT PROVIDES IMMEDIATE PROTECTION PROTECTS AREAS AROUND INLETS FROM EROSION				✳			
38	AVAILABLE DETAIL								
39	Fabric Filter Curb Inlet Protection	CAN UTILIZE MATERIAL FOUND ON SITE EASY TO CONSTRUCT FILTERS SEDIMENT FROM RUNOFF				✳			✳
40	Inlet Sediment Trap	EASY TO SHAPE COLLECTS SEDIMENT MAY BE CLEANED AND EXPANDED AS NEEDED				✳			
41	Stone and Rock Ford Crossing	MAY BE ROCK OR CLEAN RUBBLE MINIMIZES STREAM TURBIDITY INEXPENSIVE MAY ALSO SERVE AS DITCH CHECK OR SEDIMENT TRAP		✳					
42	Temporary Culvert	ELIMINATES STREAM TURBULENCE AND TURBIDITY PROVIDES UNOBSTRUCTED PASSAGE FOR FISH AND OTHER WATER LIFE CAPACITY FOR NORMAL FLOW CAN BE PROVIDED WITH STORM WATER FLOWING OVER ROADWAY		✳					
43	Culvert Sediment Trap	EASY TO INSTALL AT INLET KEEPS CULVERT CLEAN AND FREE FLOWING MAY BE CONSTRUCTED OF LUMBER OR LOGS		✳					✳
44	AVAILABLE DETAIL								
45	Temporary Stream Channel Change	NEW CHANNEL KEEPS NORMAL FLOWS AWAY FROM CONSTRUCTION REQUIRES STATE PERMIT		✳					
46	AVAILABLE DETAIL								
47	Cofferdam	WORK CAN BE CONTINUED DURING MOST ANTICIPATED STREAM CONDITIONS CLEAN WATER CAN BE PUMPED DIRECTLY BACK INTO STREAM		✳					
48	AVAILABLE DETAIL								
49	Check Dam	REDUCES FLOW VELOCITY CATCHES SEDIMENT CAN BE CONSTRUCTED OF LOGS, STRAW, HAY, ROCK, LUMBER, MASONRY, OR SAND BAGS		✳	✳				
50	AVAILABLE DETAIL								
51	Retaining Wall	REDUCES GRADIENT WHERE SLOPES ARE EXTREMELY STEEP PERMITS RETENTION OF EXISTING VEGETATION, KEEPING SOIL STABLE IN CRITICAL AREAS, MINIMIZES MAINTENANCE	✳						✳
52	AVAILABLE DETAIL								
53	Windbreak	MINIMIZES WIND EROSION MAY BE SNOW FENCE					✳		
54	Silt Fence	USES GEOTEXTILE FABRIC AND POSTS OR POLES EASY TO CONSTRUCT AND LOCATE AS NECESSARY	✳		✳		✳		✳
55	Stone Filter–Before Paving	STONE FILTER TO PROVIDE INEXPENSIVE AND EASILY CONSTRUCTED SEDIMENT CONTROL PRIOR TO PAVING SEE DETAIL AT LEFT			✳	✳			
55A	Stone Filter–After Paving	STONE FILTER TO PROVIDE INEXPENSIVE AND EASILY CONSTRUCTED SEDIMENT CONTROL AFTER PAVING SEE DETAIL AT LEFT			✳	✳			
56	AVAILABLE DETAIL								
57	Stream – Liner	MAY BE 6A TYPE STONE, SMALL ROCKS OR SIMILAR–SIZED CLEAN CONCRETE–MASONRY RUBBLE, MINIMIZES STREAM TURBIDITY RELATIVELY INEXPENSIVE MAY BE USED AS DITCH CHECK OR SEDIMENT TRAP		✳	✳				
58	Sediment Sump	CONTROLS SEDIMENTATION IN LARGE STREAMS, CONSIST OF OVER EXCAVATING THE DRAIN BY ONE TO TWO FEET. THE SUMP WILL BE AT LEAST 200 FEET LONG. SEDIMENTS ACCUMULATED DURING CONSTRUCTION WILL BE REMOVED UPON PROJECT COMPLETION		✳	✳				
59	AVAILABLE DETAIL								
60	Temporary Construction Entrance	ASSISTS IN REMOVING SOIL FROM THE TIRES OF CONSTRUCTION EQUIPMENT/VEHICLES WHEN EXITING THE CONSTRUCTION SITE. THIS REDUCES TRACKING EXCESSIVE SEDIMENT/SOIL ONTO THE ADJACENT ROAD							✳

SOIL EROSION AND SEDIMENTATION CONTROL

1. CONSTRUCTION OPERATIONS SHALL BE SCHEDULED AND PERFORMED SO THAT PREVENTATIVE EROSION CONTROL MEASURES ARE IN PLACE PRIOR TO EXCAVATION AND TEMPORARY STABILIZATION MEASURES ARE IN PLACE IMMEDIATELY FOLLOWING BACKFILLING AND/OR GRADING OPERATIONS.
2. SPECIAL PRECAUTIONS WILL BE TAKEN IN THE USE OF CONSTRUCTION EQUIPMENT TO PREVENT SITUATIONS THAT PROMOTE EROSION.
3. CLEANUP WILL BE DONE IN A MANNER TO INSURE THAT EROSION CONTROL MEASURES ARE NOT DISTURBED.
4. THE PROJECT WILL CONTINUALLY BE INSPECTED FOR SOIL EROSION AND SEDIMENT CONTROL COMPLIANCE. DEFICIENCIES WILL BE CORRECTED BY THE CONTRACTOR WITHIN 24 HOURS.
5. TEMPORARY EROSION CONTROL MEASURES SHALL BE COMPLETELY REMOVED BY THE CONTRACTOR UPON ESTABLISHMENT OF PERMANENT CONTROL MEASURES.

CONSTRUCTION SEQUENCE

1. EXCAVATION AND STOCKPILING OF SOIL.
2. IMPLEMENTATION OF TEMPORARY EROSION CONTROL MEASURES; SELECTIVE GRADING, DIVERSIONS AS REQUIRED IN FIELD, PROTECTION OF STORM SEWER FACILITIES.
3. PERIODIC MAINTENANCE OF AFFECTED EROSION CONTROL MEASURES.
4. PERMANENT MEASURES; FINAL GRADING, SEEDING AND MULCHING.

SEE UNIFIED KEYING SYSTEM FOR EROSION CONTROL KEY NUMBERS

MDEQ STREAM CROSSING NOTES

CONSTRUCTION OF STREAM CROSSINGS SHALL BE SUBJECT TO THE SPECIFICATIONS FOR PROTECTION OF NATURAL RESOURCES AT UTILITY CROSSINGS AS GIVEN IN THE ADMINISTRATIVE RULES OF PART NO. 301 OF PUBLIC ACT 451, AS AMENDED, 1994.

A SILTATION BARRIER SHALL BE CONSTRUCTED IMMEDIATELY DOWNSTREAM OF THE CONSTRUCTION SITE PRIOR TO THE COMMENCEMENT OF ANY CONSTRUCTION ACTIVITIES. (SEE MICHIGAN UNIFIED KEYING SYSTEM FOR SPECIFIED BARRIER) THE SILTATION BARRIER SHALL BE MAINTAINED IN GOOD WORKING ORDER THROUGHOUT THE DURATION OF THE PROJECT.

BACKFILL SHALL CONSIST OF INERT MATERIALS WHICH WILL NOT CAUSE SILTATION NOR CONTAIN SOLUBLE CHEMICALS OR ORGANIC MATTER WHICH IS BIODEGRADABLE. ALL FILL SHALL BE CONTAINED IN SUCH A MANNER SO AS NOT TO ERODE INTO ANY WATERCOURSE.

ALL RAW BANKS SHALL BE STABILIZED WITH RIPRAP TO THREE FEET ABOVE THE ORDINARY HIGH WATER WATER MARK, THEN SEEDED, FERTILIZED AND MULCHED, OR SODDED TO PREVENT EROSION.

UPON PROJECT COMPLETION THE EXCESS SPOILS SHALL BE REMOVED AND DISPOSED OF IN AN APPROVED UPLAND SITE.

SILTATION BARRIER MAY BE REMOVED UPON PLACEMENT OF PERMANENT EROSION CONTROL MEASURES.

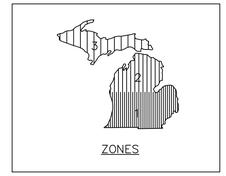

ZONES

ZONE 1

TYPE OF SEED	APRIL	MAY	JUNE	JULY	AUG.	SEPT.	OCT.	RATE OF APPLICATION* PER/1000 S.F.	PER ACRE
OATS / BARLEY ANNUAL RYE	▨	▨	▨	▨	▨	▨ 15TH		2 LBS. 3/4 LB.	3 BUSHELS 25 LBS.
SUDANGRASS			▨	▨ 15TH				1 LB.	35 LBS.
CEREAL RYE					▨	▨	▨ 15TH	1.5 LBS.	2 BU.
WINTER WHEAT						▨ 20TH	▨ 15TH	1.5 LBS.	2 BU.

TEMPORARY SEEDING GUIDE

▨ RECOMMENDED PLANTING SEASON

* RATE OF APPLICATION APPLIES TO ALL ZONES

ZONE	TYPE OF IRRIGATION	APRIL	MAY	JUNE	JULY	AUG.	SEPT.	OCT.
ZONE 1	IRRIGATED and/or MULCHED without IRRIGATION or MULCH		▨	▨	▨	▨	▨	
ZONE 2	IRRIGATED and/or MULCHED without IRRIGATION or MULCH			▨	▨	▨	▨	
ZONE 3	IRRIGATED and/or MULCHED without IRRIGATION or MULCH			▨	▨	▨	▨	

PERMANENT SEEDING GUIDE

▨ RECOMMENDED PLANTING SEASON

TO BE COMPLETED BY CONTRACTOR FOR PERMIT

SOIL EROSION / SEDIMENTATION CONTROL
OPERATION TIME SCHEDULE

CONSTRUCTION SEQUENCE	JAN	FEB	MAR	APR	MAY	JUN	JULY	AUG	SEP	OCT	NOV	DEC
STRIP & STOCKPILE TOPSOIL												
ROUGH GRADE / SEDIMENT CONTROL												
TEMP. CONTROL MEASURES												
STORM FACILITIES												
TEMP. CONSTRUCTION ROADS												
FOUNDATION / BLDG. CONSTRUCTION												
SITE CONSTRUCTION												
PERM. CONTROL MEASURES												
FINISH GRADING												
LANDSCAPING												

GENESEE COUNTY DRAIN COMMISSIONER
DIVISION OF WATER & WASTE SERVICES
G-4610 BEECHER ROAD FLINT, MI 48532
PHONE: 810-732-7870 FAX: 810-732-9773

SOIL EROSION KEY SHEET

JEFFREY WRIGHT
GENESEE COUNTY
DRAIN COMMISSIONER

GENESEE COUNTY WWS DRAIN COMMISSIONER

DRAWN: LMM
APPROVED: MTR
SCALE: NONE
DATE: 2013

XX

Attachment: 16-17 (2254 : SPR #16-17)

SOUTH FLINT TABERNACLE
FLINT, MICHIGAN

ZION CHURCH BUILDERS, INC.
MATTAWAN, MICHIGAN

PROGRESS SET

SOUTH FLINT TABERNACLE

A NEW FACILITY FOR

FLINT, MICHIGAN

MAIN LEVEL FLOOR PLAN - AREA A

No.	Date

PROJECT NUMBER 15-09

PRINT RELEASE DATE 08JAN16

A1

© 2016

Daniel G. White, Architect, LLC
PO Box 695 8576 West Farm Road 76 Willard, Missouri 65781
(417)425-9618
dgwcreations@gmail.com
Architect for:
ZION CHURCH BUILDERS, INC
P.O. Box 218, Mattawan, MI 49071
(269)544-7211 – (269) 544-7216 Fax
email: zionchurchbuilders@gmail.com

MILLWORK AND MISC. EQUIPMENT SCHEDULE NOTES

1. COORDINATE FINAL LOCATIONS WITH LOCAL FIRE MARSHALL.
2. PROVIDE BLOCKING IN WALLS AS REQUIRED FOR PROPER INSTALLATION OF ALL EQUIPMENT AND ACCESSORIES.
3. PROVIDE HANDRAIL BRACKETS AT 48" O.C. MAX (EVENLY SPACED) AND AT CHANGE OF DIRECTIONS, PROVIDE BLOCKING IN WALL FOR HANDRAIL BRACKETS AND RETURN HANDRAILS TO WALL. HANDRAILS TO FOLLOW PLANS AND DETAILS SHOWN. HANDRAILS SHALL SLOPE WITH STAIR OR RAMP AT 2'-10" A.F.F. AND SHALL EXTEND LEVEL 12 INCHES AT THE TOP OR RAMPS AND STAIRS. HANDRAILS SHALL EXTEND LEVEL 12" AT BOTTOM OF RAMPS AND AT STAIRS SHALL SLOPE PAST BOTTOM OF STAIR ONE TREAD LENGTH AND THEN EXTEND LEVEL 12"
4. TOILET PARTITIONS TO BE EQUAL TO "PLUSH METAL" OVERHEAD BRACED METAL TOILET PARTITIONS (PLUSHITE)PROVIDED WITH ALL HARDWARE AND MOUNTING ACCESSORIES. COLOR AND STYLE AS SELECTED BY CHURCH.
5. COAT RACK WITH HANGERS TO BE A SINGLE SHELF ALUMINUM COAT RACK WITH OPTIONAL HANGERS, MODEL K1 AS MANUFACTURED BY EMCO SPECIALTY PRODUCTS INC., KANSAS CITY, KS 66105 OR PRE-APPPROVED EQUAL. PROVIDE 6 HANGERS PER FOOT OF COAT RACK..

MILLWORK AND MISC. EQUIP. SCHEDULE

MARK	DESCRIPTION	DETAILS	REMARKS
1	VANITY	11/A12	SEE NOTE #2
2	FIRE EXTINGUISHER	---	"LARSEN" F62409-R4 W/ MP5 NOTE #1
3	FIRE EXTINGUISHER	---	"LARSEN" MP5 W/ WALL BRACKET NOTE #1
4	TOILET PARTITION	---	SEE NOTE #4
5	SOUND BOOTH	10/A12	SEE NOTE #2
6	CABINETRY	12/A12	SEE NOTE #2
7	1¼" DIA. WOOD HANDRAIL	---	SEE NOTES #2 AND #3
8	12" DIA. COMPOSITE COLUMN	---	
9	COAT RACK	9/A12	SEE NOTES #2 AND #5
10	FIBERGLASS BAPTISTERY	---	MODEL BA WITH OPTIONAL WINDOW, PREPLUMBED WITH HEATER AS SUPPLIED BY CHURCH (OUTLET
11	FIBERGLASS STEEPLE UNIT	---	MODEL 615 WITH KRINGLE GLASS WINDOW AND LIGHTNING PROTECTION AS SUPPLIED BY CHURCH OUTLET

GENERAL NOTES

1) THE ARCHITECT RESERVES THE RIGHT TO MAKE ALL DECISIONS REGARDING THE INTERPRETATION OF PLANS AND SPECIFICATIONS AS THEY APPLY TO THIS PROJECT. CONSULT WITH THE ARCHITECT IMMEDIATELY IF CONFLICTS OR ERRORS ARE DISCOVERED IN THESE DOCUMENTS.
2) ALL WORK PERFORMED ON THIS PROJECT SHALL BE DONE IN ACCORDANCE WITH ALL APPLICABLE STATE AND LOCAL CODES AND ORDINANCES AS ADOPTED AND PRACTICED AT THE TIME OF CONSTRUCTION.
3) SUBCONTRACTORS SHALL COORDINATE ALL WORK TO BE DONE THROUGH THE JOB SUPERINTENDENT PROVIDED BY ZION CHURCH BUILDERS.
4) NEW ADDITION INFORMATION:
   BUILDING MAIN LEVEL FOOTPRINT - 51,002 SQUARE FEET
   BUILDING UPPER LEVEL - 19,367 SQUARE FEET
   TOTAL BUILDING AREA - 70,369 SQUARE FEET
5) DIMENSIONS AS SHOWN ON PLAN ARE TO THE FACES OF UNFINISHED STUD WALLS AND TO THE FACE OF MASONRY. MASONRY IS DIMENSIONED SHOWING NOMINAL DIMENSIONS.
6) ALL INTERIOR PARTITIONS ARE METAL STUDS - WALL TYPE "B", UNLESS NOTED OTHERWISE. - ALL EXTERIOR WALLS ARE 6 INCH METAL STUDS WITH GYPSUM SHEATHING, MASONRY VENEER WAINSCOT WITH SYNTHETIC STUCCO OVER RIGID INSULATION WITH DRAINAGE SYSTEM - WALL TYPE "A", UNLESS OTHERWISE NOTED. ALL WOOD PLATES IN CONTACT WITH CONCRETE SLAB SHALL BE TREATED (CCA) WOOD.
7) PROVIDE SOLID WOOD BLOCKING IN WALLS AS REQUIRED FOR INSTALLATION OF EQUIPMENT AND ACCESSORIES.
8) USE 5/8" FIRE CODE GYPSUM BOARD THROUGHOUT EXCEPT AS OTHERWISE SPECIFIED. SEE ROOM FINISH SCHEDULE SHEET.
9) PROVIDE EXPANSION JOINTS IN GYPSUM BOARD CEILING AT 40'-0" MAXIMUM SPACING, SPACING AT INTERVALS AS REQUIRED.
10) ALL EXTERIOR LANDINGS AT AN ACCESSIBLE MEANS OF EGRESS DOOR SHALL NOT SLOPE MORE THAN 1/4" PER FOOT AWAY FROM THE BUILDING.
11) ALL DOOR THRESHOLDS AND STOOPS OR CHANGES IN FLOOR FINISHES SHALL PROVIDE A CHANGE IN VERTICAL RISE OF NO MORE THAN 1/2" MAXIMUM.
12) PERMANENT SIGNAGE USED TO IDENTIFY ROOMS AND SPACES SHALL INCLUDE TACTILE CHARACTERS AND BRAILLE, TO BE MOUNTED ADJACENT TO THE DOOR. SIGNS SHALL BE MOUNTED AT 60" ABOVE FINISH FLOOR ELEVATION TO CENTER OF SIGN.
13) PROVIDE A BARRIER FREE SYMBOL OF COMPLIANCE AT ALL ACCESSIBLE RESTROOMS AND BUILDING ENTRANCES.
14) FOR MILLWORK AND MISCELLANEOUS EQUIPMENT SCHEDULE, REFER TO SCHEDULE THIS SHEET.
15) CONTROLS, OPERATING MECHANISMS AND HARDWARE INTENDED FOR OPERATION BY THE OCCUPANT, INCLUDING SWITCHES THAT CONTROL LIGHTING AND VENTILATION AND ELECTRICAL CONVENIENCE OUTLETS, IN ACCESSIBLE SPACES, ALONG ACCESSIBLE ROUTES OR AS PART OF ACCESSIBLE ELEMENTS, SHALL BE ACCESSIBLE.

FIRE LEGEND

	1HR FIRE PARTITION - SEE WALL LEGEND FOR U.L. DESIGN. SEAL ALL PENETRATIONS INTO AND THROUGH WALL ASSEMBLY USING A U.L. THROUGH - PENETRATION FIRESTOP SYSTEM RECOGNIZED AS A 1 HR SYSTEM. EXTEND WALL UP TO UNDERSIDE OF THE FLOOR DECK, ROOF DECK OR RATED FLOOR / CEILING ASSEMBLY.
	2HR FIRE BARRIER - SEE WALL LEGEND FOR U.L. DESIGN. SEAL ALL PENETRATIONS INTO AND THROUGH WALL ASSEMBLY USING A U.L. THROUGH - PENETRATION FIRESTOP SYSTEM RECOGNIZED AS A 2 HR SYSTEM. EXTEND WALL UP TO UNDERSIDE OF ROOF DECK

1 MAIN LEVEL FLOOR PLAN - AREA A
3/32" = 1'-0" FINISH FLOOR ELEVATION = 100'-0" (UNLESS NOTED OTHERWISE)

Attachment: 16-17 (2254 : SPR #16-17)

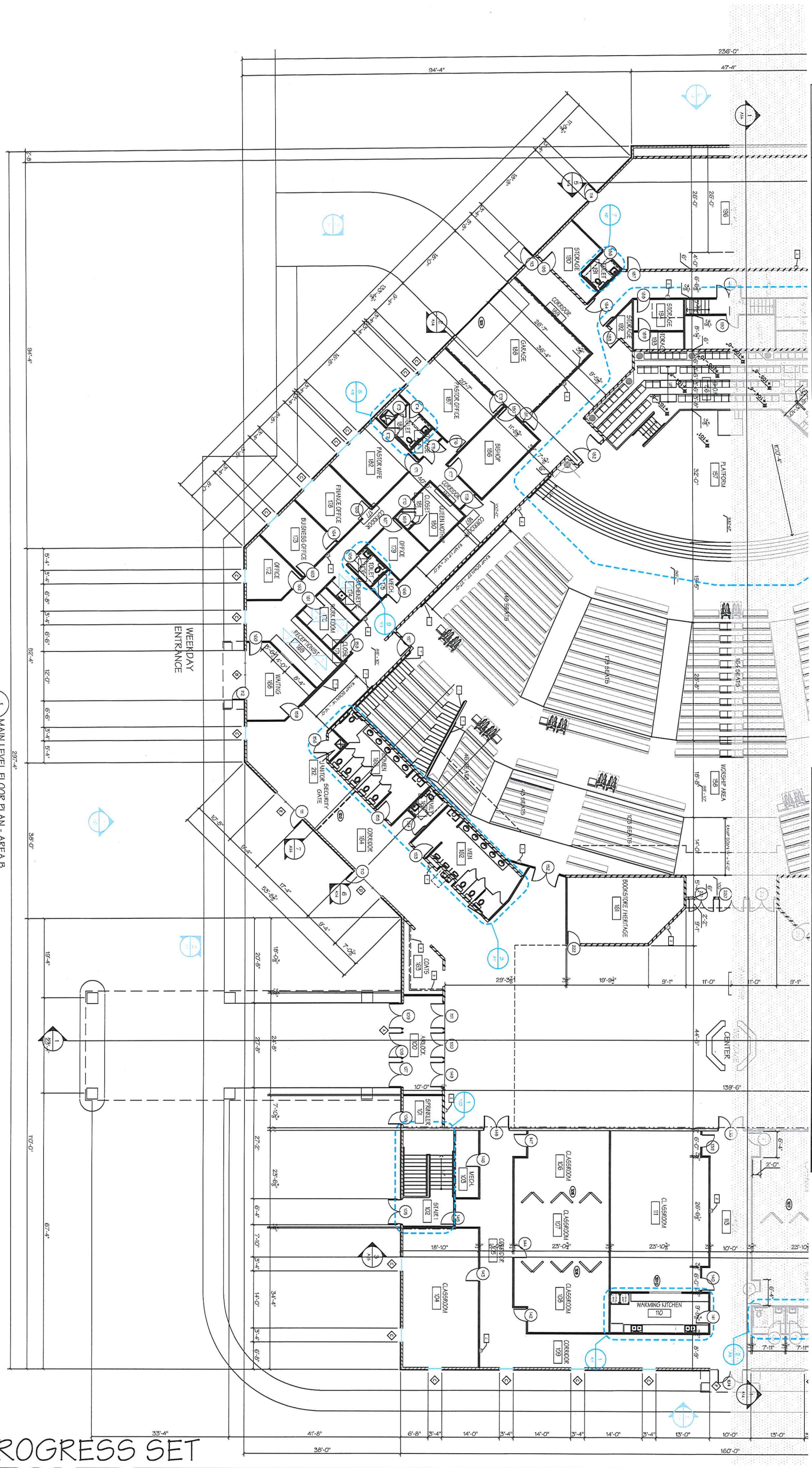

FIRE LEGEND

	1HR FIRE PARTITION - SEE WALL LEGEND FOR U.L. DESIGN. SEAL ALL PENETRATIONS INTO AND THROUGH WALL ASSEMBLY USING A U.L. THROUGH - PENETRATION FIRESTOP SYSTEM RECOGNIZED AS A 1 HR SYSTEM. EXTEND WALL UP TO UNDERSIDE OF THE FLOOR DECK, ROOF DECK OR RATED FLOOR / CEILING ASSEMBLY.
	2 HR FIRE BARRIER - SEE WALL LEGEND FOR U.L. DESIGN. SEAL ALL PENETRATIONS INTO AND THROUGH WALL ASSEMBLY USING A U.L. THROUGH - PENETRATION FIRESTOP SYSTEM RECOGNIZED AS A 2 HR SYSTEM. EXTEND WALL UP TO UNDERSIDE OF ROOF DECK.

MILLWORK AND MISC. EQUIPMENT SCHEDULE

MARK	DESCRIPTION	DETAILS	REMARKS
1	VANITY	12/A4	SEE NOTE #2.
2	FIRE EXTINGUISHER	---	"LARSEN" FS2409-R4 W/ MPS NOTE #1
3	FIRE EXTINGUISHER	---	"LARSEN" MPS W/ WALL BRACKET NOTE #1
4	TOILET PARTITION	15/A4	SEE NOTE #4
5	SOUND BOOTH	11/A4	SEE NOTE #2
6	CABINETRY	11/A4	SEE NOTES #2 AND #3
7	1¼" DIA. WOOD HANDRAIL		
8	12" DIA. COMPOSITE COLUMN	4/A7	SEE NOTES #2 AND #5
9	COAT RACK	4/A7	MODEL 8A AS SUPPLIED BY CHURCH OUTLET
10	FIBERGLASS BAPTISTERY		MODEL 615 WITH KERKOS E-GLASS WINDOW AND LIGHTNING PROTECTION AS SUPPLIED BY CHURCH OUTLET
11	FIBERGLASS STEEPLE UNIT		

MILLWORK AND MISC. EQUIPMENT SCHEDULE NOTES

1. COORDINATE FINAL LOCATIONS WITH LOCAL FIRE MARSHALL.
2. PROVIDE BLOCKING IN WALLS AS REQUIRED FOR PROPER INSTALLATION OF ALL EQUIPMENT AND ACCESSORIES.
3. PROVIDE HANDRAIL BRACKETS AT 48" O.C. MAX (EVENLY SPACED) AND AT CHANGE OF DIRECTIONS. PROVIDE BLOCKING IN WALL FOR HANDRAIL BRACKETS AND RETURN HANDRAILS TO WALL. HANDRAILS TO FOLLOW PLANS AND DETAILS SHOWN. HANDRAILS SHALL SLOPE WITH STAIR OR RAMP AT 2'-10" A.F.F. AND SHALL EXTEND LEVEL 12 INCHES AT THE TOP OF RAMPS AND STAIRS. HANDRAILS SHALL EXTEND LEVEL 12" AT BOTTOM OF RAMPS AND AT STAIRS SHALL SLOPE PAST BOTTOM OF STAIR ONE TREAD LENGTH AND THEN EXTEND LEVEL 12"
4. TOILET PARTITIONS TO BE EQUAL TO "FLUSH METAL" OVERHEAD BRACED METAL TOILET PARTITIONS (FLUSH/STEEP) PROVIDED WITH ALL HARDWARE AND MOUNTING ACCESSORIES. COLOR AND STYLE AS SELECTED BY CHURCH.
5. COAT RACK WITH HANGERS TO BE A SINGLE SHELF ALUMINUM COAT RACK WITH OPTIONAL HANGERS, MODEL R1 AS MANUFACTURED BY EMCO SPECIALTY PRODUCTS INC., KANSAS CITY, KS 66105 OR PRE-APPROVED EQUAL. PROVIDE 6 HANGERS PER FOOT OF COAT RACK.

PROGRESS SET

A NEW FACILITY FOR

SOUTH FLINT TABERNACLE

FLINT, MICHIGAN

MAIN LEVEL FLOOR PLAN - AREA B

Daniel G. White, Architect, LLC
PO Box 695 8576 West Farm Road 76 Willard, Missouri 65781
(417)425-9618
dgwcreations@gmail.com
Architect for:
ZION CHURCH BUILDERS, INC
P.O. Box 218, Mattawan, MI 49071
(269)544-7211 – (269) 544-7216 Fax
email: zionchurchbuilders@gmail.com

No. | Date

PROJECT NUMBER 15-09

ORIGINAL ISSUE DATE 08JAN16

A2 OF ----

© 2016

FIRE LEGEND

1HR FIRE PARTITION - SEE WALL LEGEND FOR U.L. DESIGN. SEAL ALL PENETRATIONS INTO AND THROUGH WALL ASSEMBLY USING A U.L. THROUGH-PENETRATION FIRESTOP SYSTEM RECOGNIZED AS A 1 HR SYSTEM. EXTEND WALL UP TO UNDERSIDE OF THE FLOOR DECK, ROOF DECK OR RATED FLOOR / CEILING ASSEMBLY.	
2HR FIRE BARRIER - SEE WALL LEGEND FOR U.L. DESIGN. SEAL ALL PENETRATIONS INTO AND THROUGH WALL ASSEMBLY USING A U.L. THROUGH-PENETRATION FIRESTOP SYSTEM RECOGNIZED AS A 2 HR SYSTEM. EXTEND WALL UP TO UNDERSIDE OF ROOF DECK	

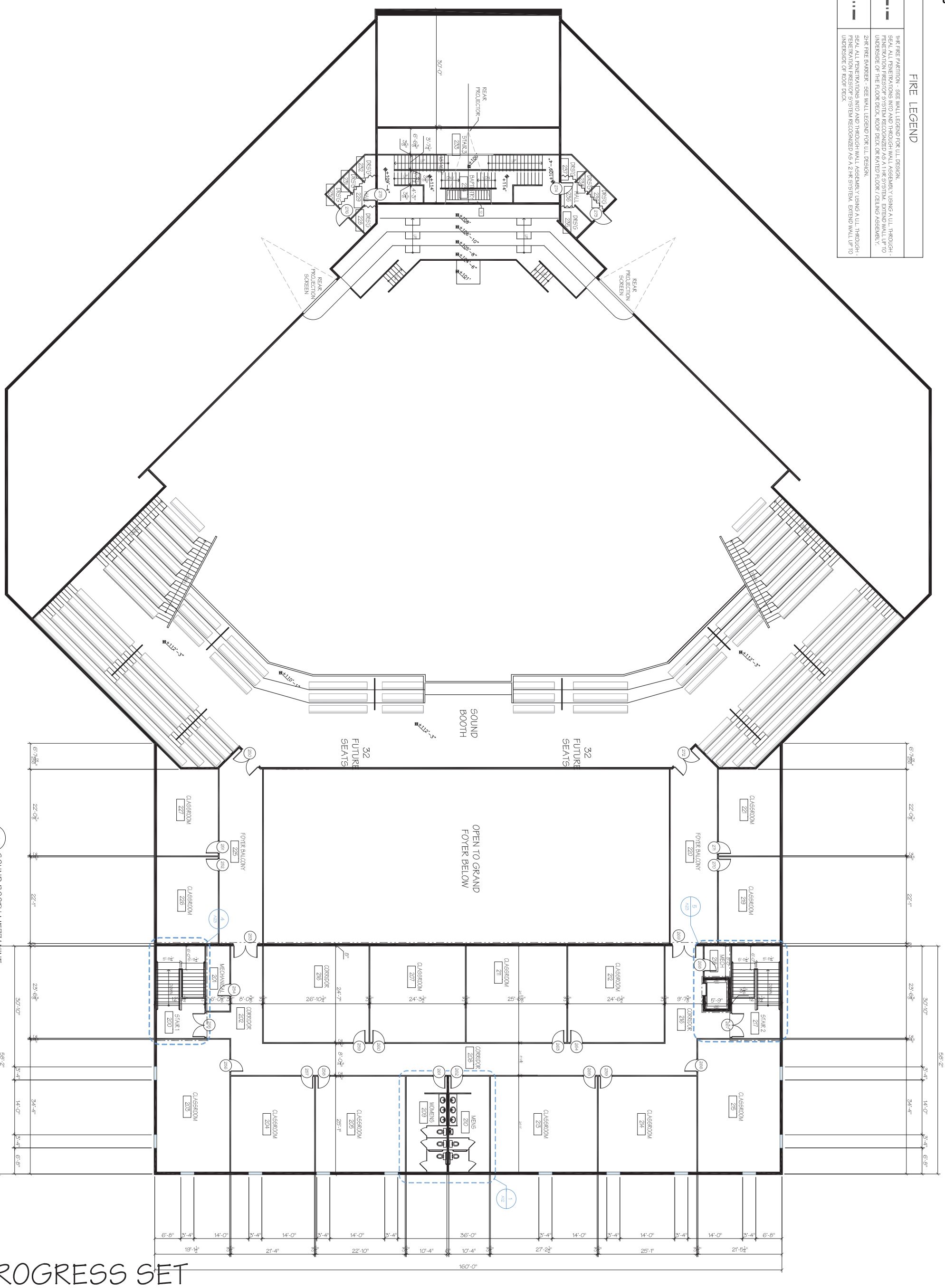

1 A3 — SOUND BOOTH MEZZANINE
3/32" = 1'-0"

PROGRESS SET

© 2016 A3 OF ...	ORIGINAL ISSUE DATE: 08JAN16	PROJECT NUMBER: 15-09

No. | Date

A NEW FACILITY FOR

SOUTH FLINT TABERNACLE

FLINT, MICHIGAN

UPPER LEVEL FLOOR PLAN

Daniel G. White, Architect, LLC
PO Box 695 8576 West Farm Road 76 Willard, Missouri 65781
(417)425-9618
dgwcreations@gmail.com
Architect for:
ZION CHURCH BUILDERS, INC
P.O. Box 218, Mattawan, MI 49071
(269)544-7211 – (269) 544-7216 Fax
email: zionchurchbuilders@gmail.com

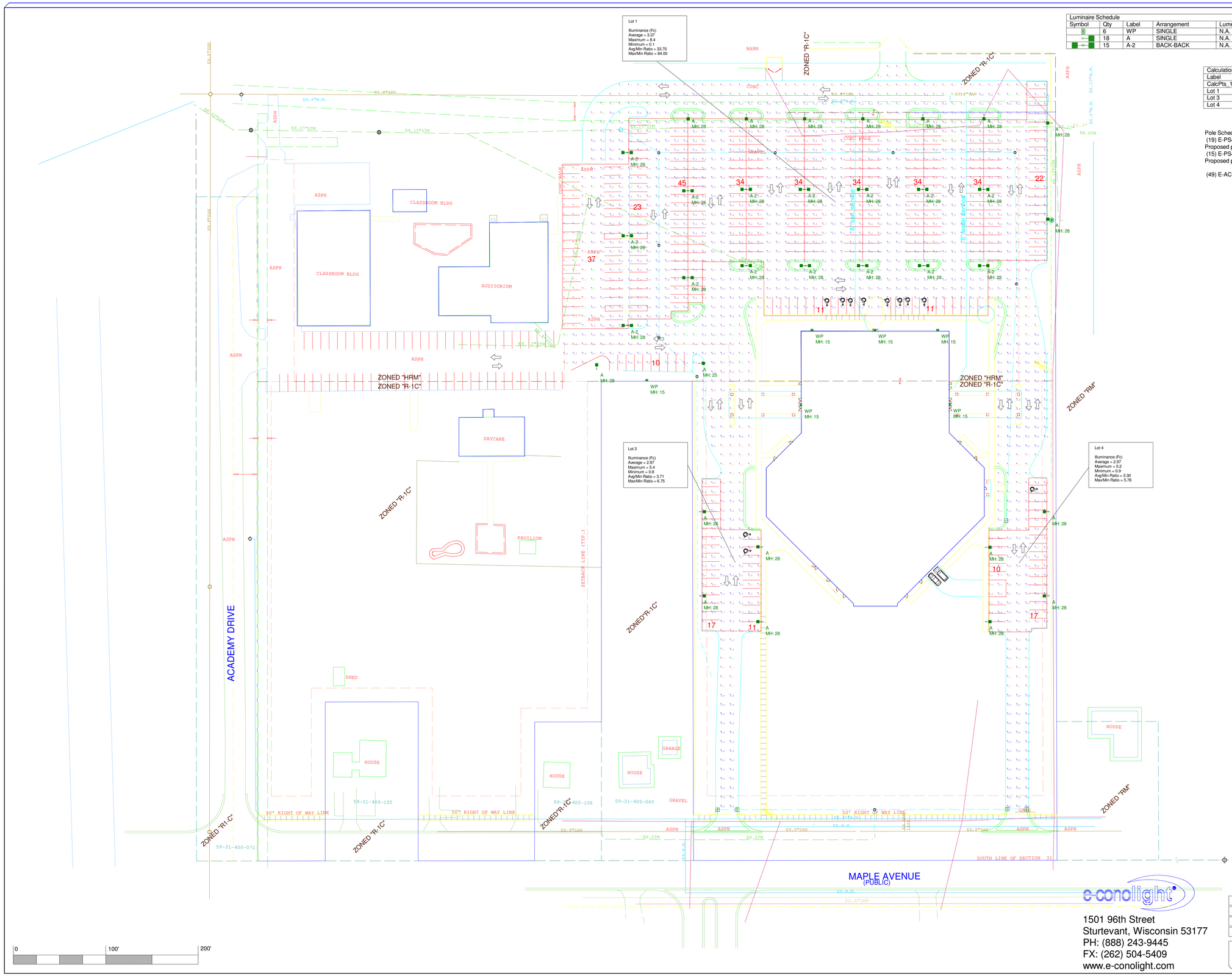

Luminaire Schedule							
Symbol	Qty	Label	Arrangement	Lumens/Lamp	LLF	Total Watts	Description
	6	WP	SINGLE	N.A.	1.000	450	E-WP11L07UNZ
	18	A	SINGLE	N.A.	1.000	2790	E-AL1L315NZ
	15	A-2	BACK-BACK	N.A.	1.000	4650	E-AL1L315NZ

Calculation Summary					
Label	Avg	Max	Min	Avg/Min	Max/Min
CalcPts_1	2.55	8.4	0.0	N.A.	N.A.
Lot 1	3.37	8.4	0.1	33.70	84.00
Lot 3	2.97	5.4	0.8	3.71	6.75
Lot 4	2.97	5.2	0.9	3.30	5.78

Pole Schedule
(19) E-PS4E25S1DB (25' X 4" X .180" STEEL SQUARE POLE)
Proposed poles meet 100 MPH sustained winds.
(15) E-PS4E25S2DB (25' X 4" X .180" STEEL SQUARE POLE)
Proposed poles meet 100 MPH sustained winds.

(49) E-ACE (Direct Arm Mount)

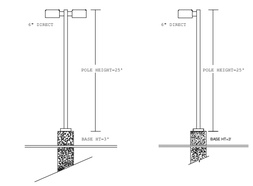

Customer responsible to verify ordering information/ catalogue number prior to placing order.

e-conolight
1501 96th Street
Sturtevant, Wisconsin 53177
PH: (888) 243-9445
FX: (262) 504-5409
www.e-conolight.com

Date:3/18/2016	Scale: 1"=50'	Layout by: Ben Foster
Project Name: 129369 - South Flint Tabernacle		Salesforce: SR-12616
Filename: 160226LH1BAFR1.AGI		
Footcandles calculated at grade using mean lumen values		

Illumination results shown on this lighting design are based on project parameters provided to E-conolight used in conjunction with luminaire test procedures conducted under laboratory conditions. Actual project conditions differing from these design parameters may affect field results. The customer is responsible for verifying dimensional accuracy along with compliance with any applicable electrical, lighting, or energy code.

SPR #16-14

By: John Chams
48 Birchmount Walk
London, On

Re: 3211 S. Dort Hwy Burton, MI 48529

For: Used Vehicle Sales

ATTACHMENTS:

- 16-14 (PDF)

City of Burton
Department of Public Works
4093 Manor Drive
Genesee County, Burton, Michigan 48519
(810) 742-9230

APPLICATION FOR ZONING REVIEW

DATE FILED: 3-17-16

FEE: **$40.00**

RECEIPT NO: _____

CHECK NO: 00057

SPR #: 16-14

PLEASE PRINT

DATE: March 7 2016

APPLICANTS NAME: John Jihad Chams

APPLICANTS ADDRESS: 48 Birchmount Walk London on

APPLICANTS PHONE NO: 519-857-6161 or 616-228-2885

PROPOSED NAME OF BUSINESS: 229673 ontario INC o/p Delta Auto Group

PROPOSED TYPE OF BUSINESS: whole sale cars / suv / TRUCKS

SITE ADDRESS: G3211 A S Dort Hwy Burton MI 48529

USE OF STRUCTURE: office for wholesale

SQ FOOTAGE OF PROPERTY: 100 X 90 Feet

SQ FOOTAGE OF STRUCTURE: 60 x 40 Feet

NUMBER OF EMPLOYEES/SEATS: 1

APPLICANTS SIGNATURE: _____

*** ALSO ATTACH A FLOOR PLAN OF THE EXISTING AND PROPOSED BUSINESS.

Attachment: 16-14 (2251 : SPR #16-14)

SPR #16-15

By: Riad Osman
817 Byron Hills Drive
London, On

Re: 3201 S. Dort Hwy. Burton, MI 48529

For: Office Space

ATTACHMENTS:

- 16-15 (PDF)

City of Burton

Department of Public Works
4093 Manor Drive
Genesee County, Burton, Michigan 48519
(810) 742-9230

APPLICATION FOR ZONING REVIEW

DATE FILED: 3-17-16

FEE: **$40.00**

RECEIPT NO: _____

CHECK NO: 000043

SPR #: 16-15

PLEASE PRINT

DATE: march 10 / 2016.

APPLICANTS NAME: Riad Osman

APPLICANTS ADDRESS: 817 Byron Hills Drive London ont

APPLICANTS PHONE NO: 519-495 2765

PROPOSED NAME OF BUSINESS: London Auto Mile LTD

PROPOSED TYPE OF BUSINESS: Office Space.

SITE ADDRESS: 63201 South Dort Hwy Burton Michigan 48529

USE OF STRUCTURE: Office Space.

SQ FOOTAGE OF PROPERTY: 100 x 90 feet

SQ FOOTAGE OF STRUCTURE: 60 x 40 feet

NUMBER OF EMPLOYEES/SEATS: 1

APPLICANTS SIGNATURE: _____

*** ALSO ATTACH A FLOOR PLAN OF THE EXISTING AND PROPOSED BUSINESS.

* 3-17-16 Spoke w/ Riadh (519-495-2765) I explained that he cannot have used car sales here. Only an office space. I also said it would not sign the State paperwork for the zoning or municipal approval because this is office space.

Attachment: 16-15 (2252 : SPR #16-15)

SPR #16-18

By: Commercial Graphics of MI Inc.
1453 Walli Strasse
Burton, MI 48509

Re: 1453 Walli Strasse Burton, MI 48509

For: Printing Company

ATTACHMENTS:

- 16-18 (PDF)

City of Burton
Department of Public Works
4093 Manor Drive
Genesee County, Burton, Michigan 48519
(810) 742-9230

APPLICATION FOR ADMINISTRATIVE SITE PLAN REVIEW

DATE FILED: 3-21-16

FEE: **$75.00**

RECEIPT NO:

CHECK NO: Cash

SPR #: 16-18

PLEASE PRINT

DATE: 3-21-16

APPLICANTS NAME: Commercial Graphics of MI Inc

APPLICANTS ADDRESS: 1453 Walli Strasse

APPLICANTS PHONE NO: 810-577-5104

PROPOSED NAME OF BUSINESS: Commercial Graphics of MI Inc

SITE ADDRESS: 1453 Walli Strasse

SUBDIVISION & LOT # OR PARCEL NUMBER:

TYPE: ☑ CHANGE OF OWNERSHIP/USE ☒ CONSTRUCTION LESS THAN 2%

USE OF STRUCTURE: Printing Company

SQ FOOTAGE OF PROPERTY:

SQ FOOTAGE OF STRUCTURE: 4,100

NUMBER OF EMPLOYEES/SEATS: 6

APPLICANTS SIGNATURE:

*** ALSO ATTACH A FLOOR PLAN OF THE PROPOSED BUSINESS.

Attachment: 16-18 (2255 : SPR #16-18)

SPR #16-19

By: Big Coop's Trucking, LLC.
3066 Misty Creek
Swartz Creek, MI 48473

Re: 3481 S. Dort Hwy. Burton, MI 48529

For: Trucking Company

ATTACHMENTS:

- 16-19 (PDF)

City of Burton
Department of Public Works
4093 Manor Drive
Genesee County, Burton, Michigan 48519
(810) 742-9230

APPLICATION FOR ADMINISTRATIVE SITE PLAN REVIEW

DATE FILED: 3-22-16

FEE: **$75.00**

RECEIPT NO: _____

CHECK NO: Cash

SPR #: 16-19

PLEASE PRINT

DATE: 3-22-16

APPLICANTS NAME: Big Coops Trucking, LLC (Adam Cooper)

APPLICANTS ADDRESS: 3066 Misty Creek Swartz Creek, MI 48473

APPLICANTS PHONE NO: 810 955 4564

PROPOSED NAME OF BUSINESS: Big Coops Trucking LLC

SITE ADDRESS: 3481 S. Dort Hwy Burton, MI 48519

SUBDIVISION & LOT # OR PARCEL NUMBER: _____

TYPE: ☒ CHANGE OF OWNERSHIP/USE ☐ CONSTRUCTION LESS THAN 2%

USE OF STRUCTURE: Office, parts storage

SQ FOOTAGE OF PROPERTY: 3.8 acres

SQ FOOTAGE OF STRUCTURE: 800 sf., 1400 sf, 1800 sf

NUMBER OF EMPLOYEES/SEATS: 4 - ?

APPLICANTS SIGNATURE: Adam Cooper

*** ALSO ATTACH A FLOOR PLAN OF THE PROPOSED BUSINESS.

Attachment: 16-19 (2256 : SPR #16-19)

SPR #16-20

By: Gregory Butler
1911 Miles Rd.
Lapeer, MI 48446

Re: 4355 S. Saginaw St. Burton, MI 48529

For: Retail / Storage

ATTACHMENTS:

- 16-20 (PDF)

City of Burton
Department of Public Works
4093 Manor Drive
Genesee County, Burton, Michigan 48519
(810) 742-9230

APPLICATION FOR ADMINISTRATIVE SITE PLAN REVIEW

DATE FILED: 3-29-16

FEE: **$75.00**

RECEIPT NO: _____

CHECK NO: 3053

SPR #: 16-20

PLEASE PRINT

DATE: 3/22/16

APPLICANTS NAME: GREGORY BUTLER

APPLICANTS ADDRESS: 1911 MILES Rd., LAPEER, MI 48996

APPLICANTS PHONE NO: (810) 241-0945

PROPOSED NAME OF BUSINESS: GROTECH LLC

SITE ADDRESS: G-4355 S. SAGINAW ST.

SUBDIVISION & LOT # OR PARCEL NUMBER: _____

TYPE: ☒ CHANGE OF OWNERSHIP/USE ☐ CONSTRUCTION LESS THAN 2%

USE OF STRUCTURE: RETAIL / STORAGE

SQ FOOTAGE OF PROPERTY: 5500 SQ. FT.

SQ FOOTAGE OF STRUCTURE: 8500 SQ. FT.

NUMBER OF EMPLOYEES/SEATS: 0 / 1

APPLICANTS SIGNATURE: _____

*** ALSO ATTACH A FLOOR PLAN OF THE PROPOSED BUSINESS.

Attachment: 16-20 (2257 : SPR #16-20)

SPR #16-21

By: Allen Automotive
2447 Judd Rd.
Burton, MI 48529

Re: 2447 Judd Rd. Burton, MI 48529

For: Used Vehicles Sales

ATTACHMENTS:

- 16-21 (PDF)

City of Burton
Department of Public Works
4093 Manor Drive
Genesee County, Burton, Michigan 48519
(810) 742-9230

APPLICATION FOR ZONING REVIEW

DATE FILED: 3-2-16

FEE: **$40.00**

RECEIPT NO: Cash

CHECK NO: _____

SPR #: 16-21

PLEASE PRINT

DATE: 3-2-16

APPLICANTS NAME: Allen Automotive

APPLICANTS ADDRESS: 2447 E. Judd Rd.

APPLICANTS PHONE NO: _____

PROPOSED NAME OF BUSINESS: Allen Automotive

PROPOSED TYPE OF BUSINESS: Auto Dealer

SITE ADDRESS: 2447 E. Judd Rd.

USE OF STRUCTURE: Auto Dealer

SQ FOOTAGE OF PROPERTY: .875 Acres

SQ FOOTAGE OF STRUCTURE: 17,572 S/F

NUMBER OF EMPLOYEES/SEATS: 2

APPLICANTS SIGNATURE: _____, Managing Director Allen Auto LLC

*** ALSO ATTACH A FLOOR PLAN OF THE EXISTING AND PROPOSED BUSINESS.

Attachment: 16-21 (2258 : SPR #16-21)