CITY OF BURTON

BURTON PLANNING COMMISSION MEETING

FEBRUARY 9, 2016

MINUTES

Council Chambers	**Regular Meeting**	**5:00 PM**

4303 S. CENTER ROAD
BURTON, MI 48519

This meeting was opened by Chairman Robert Walls at 5:00 PM.

A. PLEDGE OF ALLEGIANCE

B. ROLL CALL

Attendee Name	Title	Status	Arrived
Greg Kray	Alternate Commissioner	Present	
Ellen Ellenburg	Councilwoman	Present	
Robert Walls	Chairman	Present	
Kevin Burge	Commissioner	Present	
Robert Centilli	Commissioner	Present	
Mary Ann White	Commissioner	Present	
Robert Johnson	Commissioner	Present	
Tom Gorang	Commissioner	Present	
Deb Walton	Vice-Chairman	Present	

C. STAFF PRESENT

Amber Abbey, Planning/Zoning
Bob Slattery, DPW Director
Rick Hayman, Chief of Staff
Marcy Kimball, Clerk's Office

D. APPROVAL OF MINUTES

1. Planning Commission - Regular Meeting - Jan 12, 2016 5:00 PM

RESULT:	**ACCEPTED [UNANIMOUS]**
MOVER:	Robert Johnson, Commissioner
SECONDER:	Deb Walton, Vice-Chairman
AYES:	Ellenburg, Walls, Burge, Centilli, White, Johnson, Gorang, Walton
EXCUSED:	Kray

E. SITE PLAN REVIEW

1. SPR #16-06

By: Timothy Bertram
1330 Kenneth St.
Burton, MI 48529

Re: 59-30-578-228 and 59-30-578-307 to be combined
1330 Kenneth and 1328 Kenneth to be combined
Burton, MI 48529

For: Addition to existing assisted livening facility

No one from the audience was present to speak on SPR #16-06.

Mrs. Abbey stated as the board you have the right to table this until the applicant is present, or you can act on it. Their site plan is good and I will answer as many questions as I can for you if you choose to move forward.

Mr. Walls asked if there was anyone in the audience for or against this issue and no one spoke.

Mrs. Abbey said with both lots combined the main address will be 1330 Kenneth. Genesee County 911 will only have the address of 1330 Kenneth.

Mr. Burge stated approximately six months ago this came before the planning commission and no one spoke against it. Therefore, I think we should vote on this tonight.

Motion to approve SPR #16-06 59-30-578-228 and 59-30-578-307 to be combined, 1330 Kenneth and 1328 Kenneth to be combined.

RESULT:	**CARRIED [UNANIMOUS]**
MOVER:	Kevin Burge, Commissioner
SECONDER:	Ellen Ellenburg, Councilwoman
AYES:	Ellenburg, Walls, Burge, Centilli, White, Johnson, Gorang, Walton
EXCUSED:	Kray

2. SPR #16-07

By: Bruce Calhoun
1111 Creekwood Trl.
Burton, MI 48509

Re: 1070 Creekwood
Burton, MI 48509
59-11-551-007

For: Construction of a new office building

Bruce Calhoon from Creekwood Architecture, 1111 Creekwood Trail in Burton stated we are proposing a new 3400 sq. ft. office in the district. It is on a single lot that we would like to split into two separate lots with a shared drive and shared dumpster. I have submitted the access and water easement. They are waiting for site plan review before I have them recorded. There is an issue on the rear set back line against

where the Showcase Cinema was. That rear setback is required to be 30 ft. And we are 16 to 16 1/2 ft. All of the other buildings in that development are less than that. We have underground retention. It is submitted to the Genesee County Drain Commission for approval. It's a nice wooded lot with a lot of trees.

Mrs. Abbey stated if this is approved I recommend that you put a contingency of the variance for the required setback. The water line comes off Court Street because there is no water on Creekwood Trail therefore he does have to get an easement if he wants to split the property. As far as the shared driveway, there is no downside to this.

Mr. Goring asked if this would be for a CPA office?

Mr. Calhoun stated yes, it's a shared partnership.

Mr. Burge asked about sprinkler systems requirement ordinance.

Mrs. Abbey stated that would be a question for the building inspector. I would imagine a building of this size and use would not require a sprinkler system.

Mr. Calhoun said if the fire department requires the knox box we will put one in.

Motion to approve SPR #16-07, construction of a new office building, 1070 Creekwood, Burton MI. 59-11-551-007 with the contingency for the variance of the rear yard setback.

RESULT:	**CARRIED AS AMENDED [UNANIMOUS]**
MOVER:	Robert Johnson, Commissioner
SECONDER:	Tom Gorang, Commissioner
AYES:	Ellenburg, Walls, Burge, Centilli, White, Johnson, Gorang, Walton
EXCUSED:	Kray

F. PROPOSAL

1. Consultant Presentation

This is the time that we ask each consultant to give a maximum 5 minute presentation about their proposal, and answer any questions the Commission may have. We ask that during this time the other consultants leave the room.

Mr. Walls stated at the last meeting we had a double vote on a single issue. I have approached the city attorney who informed me it does not have to be a positive motion. Whatever motion is made she will recognize it for what it is. One thing to keep in mind, there will not be a double vote from here on out. If you don't understand the motion on how to vote or what it is, please speak up before we vote. Whether you vote yes or no, please express your opinion on why you voted that way so that the administration and council can act upon it with good information. We will allow only one consultant in the room at a time. Each consultant will have five

minutes maximum to speak. When they are done, we will have discussion.

Consultant Presentation #1:

Doug Piggett with Rowe Engineering Co., 540 S. Saginaw Street in Flint stated the planning process is basically in three steps. You identify where you are, where you want to go and how you want to get there and when you want to get there. If you have gotten there, what's next? Our proposal emphasizes the idea that the implementation plan leads up to the review and the renewal of the plan. The plan starts with the identification of information about the community. It includes the history, population data, infrastructures, natural features, existing structures, land uses, transportation facilities, housing, target market analysis, economic information and analysis of other existing plans. In addition to that there is the opportunity to gather input from the public. In our base proposal are three different strategies which are public input, focus groups and online survey. We identify four optional elements. Once you have an idea of where the community is and why it is you then get information from the community on their vision. You would then establish a set of goal and policies. We then work with you in identifying strategies in achieving those goals and policies. We come up with strategies and go back to the public for their input. Once the plan is developed then there is the implementation plan. We will help you identify your priorities. We then develop a time frame. We recommend a Three Year Plan. We also help you with the five year review.

Mrs. Ellenburg asked if the cost will include your involvement in the Five Year Plan. You had mentioned we could have a Facebook page, would you man the comments? I think it is important to get the youth involved. Would you give us a power point presentation that we could use to explain this to others?

Mr. Piggett stated this will depend on what is involved. Sometimes the community will ask us to be involved if they are not where they need to be and then it would depend on the reason. Most of our clients handle the Five Year Review on their own. If you wanted a Facebook page we would monitor it.

Mrs. Abbey asked is it possible to have it set up to where the City staff can also monitor the page?

Mr. Piggett stated yes the city could monitor the page also and we would give you some type of presentation that you could use for the public.

Mr. Goring asked about the time frame and surveys.

Mr. Piggett stated the initial six months of the process is plan research, gathering information and public input. We would present that to you on a monthly basis. You would settle on goals and policies. We would prepare a draft for you. Once the draft plan is accepted we would prepare a proposed implementation plan. We would put together a draft plan and take it before the City Council to authorize the public hearing. The public hearing process is a 63 day period. You would then modify the plan if needed. Then it would go to the City Council for approval. We can do an internet survey for the public, a stakeholder's survey and a focus group interview.

Mr. Walls asked Mr. Piggett what he knows about Burton. What would you bring to

Burton?

Mr. Piggett stated having worked with the master plan 15 years ago, I learned a lot about the community. Burton is a mixture of working class, newer developments, extensive commercial area but one that has seen declines in the recent past, a community that has had to address the blight that has occurred, many schools with public support and interest.

Mr. Johnson asked for an explanation on what the stakeholders are, how many are there and what is their role.

Mr. Piggett said you would identify the stakeholders. They would be people and organizations such as a local business groups, neighbor associations, individual developers or people that represent interest groups in the community. In the proposal we said a limit of 10 of these individuals, however we have done more than that.

Ms. White said I think your knowledge of Burton is thorough. You work with a number of small communities that have a central downtown and Burton is very diversified. How often do you deal with our situation where we have a downtown that needs to be developed but there are many other areas that need to be looked at as well?

Mr. Piggett stated we recently worked with establishing Mt. Morris DDA. They have large corridors of large commercial land to redevelop. This is an experience that we could bring to this project.

Mr. Burge asked what Rowe's initial fee be?

Mr. Piggett said that is usually negotiated with the client. Once we complete each monthly element then we would bill for that element.

Mr. Walls said there is a price of $49,813 at the end.

Mrs. Abbey said keep in mind the Council is very much in support of this project and any money needed in addition to shouldn't be a problem. When the council approves they will say "a bid not to exceed." So they can't exceed that amount no matter what. We will keep track of the bills that are paid.

Mr. Piggett stated there is a standard clause that allows either party to void the contract with usually 21 days' notice but there is an obligation to complete the element that we were in and be paid for that.

Consultant Presentation #2:

Heather Seyfarth with OHM, 34000 Plymouth Road in Livonia, Michigan stated we started out with an engineering firm since 1962 and have branched out into architectural planning. The mission of our company is advancing communities. We are located throughout Michigan, Ohio and Nashville. We have an office in Flint and one in Saginaw. We value relationships and help with the changes that you want to make. We approach things by looking at data. We look at the factual basis for

planning and place high value surveys and public outreach. You want to advance your downtown, parks, housing situation and infrastructure.

Mrs. Ellenburg asked how they make sure we are on the target once we get to the 5 years. Would you be able to set up a Facebook site and help management it? Would you give us a presentation that we could take to our community to show?

Ms. Seyfarth stated when we are at the end of every process we have what we call the Implementation matrix. Going through all of the strategies that you decided on in your plan, looking at funding resources, applying for grant funds and assigning a time line. When the Five Year Plan rolls around you can look back and your progress. We would include a website for the project and Facebook and Twitter. We would be able to provide you with a presentation to introduce the master plan to show the public and write a press release to get that word out to the community.

Mr. Goring said I am concerned about the time frame for completion of the master plan and how long this will take. How have you dealt with community input?

Ms. Seyforth stated we put down a year for the planning process but this is flexible depending on where we are. There may be a particular issue where we will need to time. In the City of Pontiac we did a telephone survey for their economic recovery plan and reached 300 people. We also did a texting survey. Where we left question out at coffee shops and other areas with a phone number that people could text their answer to.

Mr. Walls asked what you know about Burton and what you would bring to our master plan that you wouldn't take to another community.

Ms. Seyforth said I know that Burton has a lot of land mass that you're struggling with and that you were hit by the recession along with everyone else. You are struggling to deal with the vacant and abandoned properties as a result of that. You are very interested in moving your downtown forward. You are looking for ways for people to get around other that roadways. Burton has an urban foundation. We would find the places that are in the most need.

Mr. Johnson asked who you feel the stake holders are in the community and what you would be looking for from them and what is aim point research.

Ms. Seyfarth stated the stakeholders would be the general public, senior groups, the residents, the youth, interest groups, business groups and other entities within your government. We want to reach out to everyone the plan will effect. You want to have a plan that creates an environment that they would want to come back to. Aim point research is the sub-consultant that we use to do survey research.

Ms. White asked what type of communities do you deal with.

Ms. Seyfarth replied we have worked with both large and small communities. We have just recently worked with Downtown Auburn Hills.

2. Discussion on the Master Plan proposals submitted by the consultants

Councilman Smith of Burton spoke regarding the money that is available for the Master Plan. Mr. Smith said there is approximately $80,000. So you have money to do this right. It can be done over two years. Our contractor will be paid in installments.

Mr. Hayman stated the money shouldn't be a big issue when you're going into the Master Plan. City Council will have opportunity to appropriate what you need. You have approximately $80,000 that will be appropriated as we go into budget negotiations.

Mrs. Ellenburg stated one of my main concerns is getting the information out to the people and that we get their ideas and opinions. She asked Mr. Piggett what are the communication ideas, public input, like surveys set in stone? I noticed that OHM did something built into their plan.

Mr. Piggett stated no they are not. Once we get started if you feel a different approach would work better we can modify it.

Ms. Seyfarth stated we would figure out the best way for you to reach out to the community. We have proposed a telephone survey and a special outreach component. I left that kind of vague to work with you and hear who you want us to reach out to.

Mrs. Ellenburg said in the plan it says $10,000 and 69 hours in public surveys.

Ms. Seyfarth stated we would also provide hard copies and digital copies of the plan.

Mr. Walls stated I think we have two very qualified Engineering Firms here. They both gave great presentations and I would like to thank them for being here.

Mr. Burge said it seems like OHM stressed more on public input.

Mr. Goring was impressed by Rowe because they are more local and more familiar with our city and county.

Mr. Walls said he thought Rowe Engineering knew more about Burton. They have been in the community quite some time.

Ms. White liked both presentations. I think OHM is more in tuned to our makeup and has more experience in working with downtown areas. Rowe Engineering works more with smaller communities. We need to look at the big picture and what’s going to happen five to ten years down the road.

Mrs. Walton said I would like to go with Rowe Engineering. I like the fact that they are local, have been in our area and are more familiar with Burton.

Mr. Johnson stated I have strong ties with our unions and our community and would like to stay local and use Rowe Engineering.

Mr. Centilli said we have been very successful with Rowe Engineering, are local and

employ local people so I prefer Rowe Engineering.

Mrs. Abbey stated your decision will have to be brought to council for approval. We plan to do that at the next council meeting.

3. Approve and Authorize the acceptance of the Master Plan proposal by Rowe Engineering and the recommendation to City Council to enter into a contract with Rowe Engineering for consultant services in the development of the City of Burton's Master Plan.

RESULT:	**CARRIED [6 TO 2]**
MOVER:	Ellen Ellenburg, Councilwoman
SECONDER:	Robert Johnson, Commissioner
AYES:	Ellenburg, Walls, Centilli, Johnson, Gorang, Walton
NAYS:	Burge, White
EXCUSED:	Kray

G. ADMINISTRATIVE SITE PLAN REVIEW

Mr. Goring asked how many medical marijuana grow facilities do we have currently. It seems like we have quite a few.

Mrs. Abbey stated we have five dispensaries and five grow facilities that have been approved. Three Dispensary's and three grow facilities are currently open at this time. We have requirements as to where they can be that is set by our City Council. I feel that for a city of our size we have kept them down compared to some other communities.

Bigsby Coffee is set to open in the Spring.

1. SPR #16-01

   By: Paula Thompson
   900 E. Geneva Dr.
   Dewitt, MI 48820

   Re: 2458 S. Center Rd. Burton, MI 48519

   For: Biggby Coffee

2. SPR #16-02

   By: Daryl Simpson
   3309 Associates Dr.
   Burton, MI 48529

   Re: 3323 Associates Dr. Burton, MI 48529

For: Medical Marijuana Grow Facility

3. SPR #16-03

By: Auction Wholesale, LLC.
1096 N. Center Rd.
Burton, MI 48509

Re: 1096 N. Center Rd. Burton, MI 48509

For: Wholesale vehicles

4. SPR #16-04

By: Rob Bulyovsky
1096 N. Center Rd. Suite 118
Burton, MI 48509

Re: 1096 N. Center Rd. Burton, MI 48509

For: Wholesale Vehicles

5. SPR #16-05

By: Ben Ashley
3412 E. Bristol Rd.
Burton, MI 48529

Re: 4232 S. Dort Hwy. Burton, MI 48529

For: Medical Marijuana Grow Facility

H. AUDIENCE PARTICIPATION

None.

I. BOARD DISCUSSION

Mr. Burge stated I believe with both companies that we had to choose from either way would have been good. I am satisfied with the way that it went and think everything will turn out ok. In the future when scheduling meeting about the master plan please give as much notice as you can.

Mrs. White said they have cleared the isle ways at the car business on Covert Road and have maintained that isle way.

The next regularly scheduled meeting will be held on Tuesday, March 15, 2015 at 5:00 p.m.

Meeting was adjourned at 6:37 PM.

CITY OF BURTON

BURTON PLANNING COMMISSION MEETING

JANUARY 12, 2016

MINUTES

Council Chambers | **Regular Meeting** | **5:00 PM**

4303 S. CENTER ROAD
BURTON, MI 48519

This meeting was opened by Chairman Robert Walls at 5:00 PM.

A. PLEDGE OF ALLEGIANCE

B. ROLL CALL

Attendee Name	Title	Status	Arrived
Greg Kray	Alternate Commissioner	Excused	
Ellen Ellenburg	Councilwoman	Excused	
Robert Walls	Chairman	Present	
Kevin Burge	Commissioner	Present	
Robert Centilli	Commissioner	Present	
Mary Ann White	Commissioner	Present	
Robert Johnson	Commissioner	Present	
Tom Gorang	Commissioner	Present	
Deb Walton	Vice-Chairman	Present	

C. STAFF PRESENT

D. APPROVAL OF MINUTES

1. Planning Commission - Regular Meeting - Dec 8, 2015 5:00 PM

RESULT:	**ACCEPTED [UNANIMOUS]**
MOVER:	Robert Johnson, Commissioner
SECONDER:	Tom Gorang, Commissioner
AYES:	Walls, Burge, Centilli, White, Johnson, Gorang, Walton
EXCUSED:	Kray, Ellenburg

E. PUBLIC HEARING

1. SPR #15-67 / ZC# 316

By: Gary Ashley
3413 Bristol Rd.
Burton, MI 48529

Dennis Depifanio
3822 Woodland Dr.
Metamora, MI 48455

Re: 4396 S. Dort Hwy.
Burton, MI 48529
59-32-400-029

For: Rezone from C-2 General Business to M-1 Light Industrial

Mr. Richard Hamilton of Flint stated he is here on behalf of Mr. Ashley and Mr. Depifanio. They have owned this rental property for a long time. Over the years, it has had a number of different uses. They currently have a deposit from an organization that wants to use the property for the purpose of storage of repossessed vehicles. The property has been used for the past few years by a number of different tenants for uses probably beyond the scope of the C-2 zoning classification however, looking at the adjoining properties and the property across the street, the use is intensive and consistent. For the past two tenants, they have been required to seek a variance from the Zoning Board of Appeals. This is a more permanent recognition of an appropriate use for the property. This variance would eliminate the need for repeat variances and would classify the property more consistently with the neighboring properties.

Ella Delduca of Burton owns the property next door that has a house on the property where her daughter and grandsons reside. She stated they have brought in wreckers and beat up cars. She doesn't think the rezoning is a good idea. It is noisy and a nuisance. Her grandson is in High School and has to hear this all night. Her daughter has MS and it disturbs her sleep. There is also a residence across the street. She doesn't believe Dort Highway should be heavy industrial yet; maybe when her daughter is gone or the property all around it is heavy industrial.

Mrs. Abbey stated the property owner is requesting the variance because they have had tenants attempt to come in but didn't want to deal with the variance processes so they have withdrawn leasing the building because of that. In 2009 and 2013 there was a variance approved for the towing company. Both of these uses are industrial. They are not asking for general industrial. This is for light industrial. Semi truck parking or uses of that nature still will not be allowed within the M-1 zone. This should alleviate some issues of concern. They will be repossessing vehicles from people who have failed to pay so these vehicles will be in good condition. They are not storing junk or crashed vehicles. These are the uses this specific tenant is proposing. Not every tenant that comes in will have this use. He has had a hard time getting tenants to come into this building. This is an industrial area. To the east side of the road it is all zoned M-1 industrial. There is an industrial business to the South of them as well as a residential home. The administration recommends approval.

Mr. Burge asked if there have been complaints regarding noise or trash in this area from the Police Department or code enforcement.

Mrs. Abbey stated she can't answer that without asking the police department.

Mr. Cenitlli asked if there was other M-1 uses in the area.

Mrs. Abbey said yes, on the east side of Dort Highway. The golf course is north of it. South of that is an industrial business with a residential home, Delduca Welding.

Minutes Acceptance: Minutes of Jan 12, 2016 5:00 PM (Approval of Minutes)

Ms. White asked how long they have owned this property.

Mr. Hamilton stated he believes since the 1980's. Mr. Ashley also owns the collision shop and the storage facility by the creek on Bristol Road in Burton.

Mr. Burge stated Mr. Hamilton has been a representative of the City of Burton for a long time. In your position, have you seen any code enforcement issues or Police action in this area?

Mr. Hamilton stated none that he can recall; not in the 35 years he was involved in that type of activity.

Mr. Burge stated if there has been no trouble in the area, he would like to recommend approval of this action.

Mr. Walls said repo businesses do a large part of their activity at night time which means they will be delivering repossessed vehicles to the business for storage at night. So, tow trucks will be dropping off vehicles and making noise at 3:00 in the morning. If we approve this for the M-1 light, can we set hours of operation?

Mrs. Abbey stated if you express your time frame concern to me I can set that trough the administrative approval. If they want to dispute it, they would appeal it through the Planning Commission. There is a Police enforced noise ordinance; anytime there is a reasonable nuisance to the adjoining property owner they can call to have it enforced. You can put time restrictions for the uses on as part of your rezoning as well.

Mrs. Walton asked how long Delduca has been in business there.

Mrs. Delduca stated since 1941.

Ms. White asked if they will have to put up privacy fencing if it was rezoned.

Mrs. Abbey stated rezoning has nothing to do with a fence requirement. There is always a privacy fence requirement between residential and commercial uses. If you want to require a six foot privacy fence along the property line, it is up to you.

Ms. White stated a six foot privacy fence doesn't eliminate the noise.

Mrs. Abbey said time restrictions will help with the noise. We will have to hope the resident calls and our Police Department enforces it.

Mr. Centilli asked if the City approves of this.

Mrs. Abbey stated yes, she recommended approval.

Mr. Centilli asked if this property has been vacant for a couple years.

Mrs. Abbey stated the last variance was in 2013 and he wasn't in there for too long. She would say it has been vacant for about two years.

Minutes Acceptance: Minutes of Jan 12, 2016 5:00 PM (Approval of Minutes)

Mr. Gorang asked if approved tonight, does this automatically go into effect?

Mrs. Abbey said it will go to City Council for a second hearing on January 18th at 6:30 PM.

Mr. Johnson asked the Delduca's normal business hours.

Mrs. Delduca stated 9:00 AM to 5:00 PM Monday through Saturday. Closed on Sunday.

Mrs. Abbey clarified with the Board that this is only a recommendation and this will go to City Council at the Public Hearing on Monday January 18th at 6:30 PM.

Mr. Walls asked if they will know it was turned down here.

Mrs. Abbey said yes, they get a copy of your minutes.

Mr. Hamilton said a motion was made to approve and it did not carry. What you really need to do is have a motion to recommend denial and have another vote so you have taken an affirmative action. What has really happened is you haven't taken an action yet.

Mr. Walls stated he understands and as an Attorney representing Mr. Ashley and Mr. Depifanio, if that would make you happy then he would be happy to accept a motion to recommend a denial of the request. He asked Mr. Hamilton if that was correct.

Ms. Boggs stated it is unnecessary to make another motion for denial. However, it is completely up to the board.

Mr. Walls said normally he would say not to do this but considering the customer is asking for it and it doesn't change the vote, he has no problem with it. This is only for procedural reasons. He asked Mr. Burge to restate the motion as a denial.

Mr. Walls asked for the opinion of the administration.

Mrs. Abbey stated she believes if an attorney is telling us we should do it maybe it would be a good idea. It is your choice.

Mr. Slattery said he concurs. It is probably unnecessary but it wouldn't hurt. It is being recommended by the customer who is an attorney so it is probably a good idea.

Mr. Walls said the customer realizes it is still going to be turned down. Mr. Hamilton has informed us of the proper way to do this in his opinion. The result will be the same and no litigation will come of it. He is just recommending that the commission turn down the request.

Motion to approve and send to City Council to rezone from C-2 General Business to M-1 Light Industrial.

Minutes Acceptance: Minutes of Jan 12, 2016 5:00 PM (Approval of Minutes)

RESULT:	**FAILED [3 TO 4]**
MOVER:	Kevin Burge, Commissioner
SECONDER:	Robert Centilli, Commissioner
AYES:	Burge, Centilli, Gorang
NAYS:	Walls, White, Johnson, Walton
EXCUSED:	Kray, Ellenburg

2. Motion to Deny Site Plan Review # 15-67: Rezone from C-2 General Business to M-1 Light Industrial.

RESULT:	**CARRIED [5 TO 2]**
MOVER:	Kevin Burge, Commissioner
SECONDER:	Mary Ann White, Commissioner
AYES:	Walls, White, Johnson, Gorang, Walton
NAYS:	Burge, Centilli
EXCUSED:	Kray, Ellenburg

F. APPROVAL OF RFP

1. Master Plan RFP

Approve and authorize the Request for Proposal for the City of Burton Master Plan.

Mrs. Abbey stated at the last meeting she got some ideas about what the board was looking for. The consultants preferred a formal RFP (Request for Proposal) so she developed an RFP. She welcomes any suggestions. She hopes to send this to the consultants tomorrow if we make action tonight. We are hoping to have them back by February 2nd. It will be on the agenda for the February 9th meeting. If you would like to do interviews or have the consultants here to answer questions, we can do it at that time.

Mr. Walls stated he thinks the consultants should be here.

Mrs. Abbey asked if the board would like the consultants to do presentations or to just be available to answer questions.

Mr. Walls said he would like them here to answer questions.

Ms. White would like the consultants to give a small five minute presentaion. The RFP is very thorough but she would like a brief presentation to refresh our memories from the last meeting.

The board agreed to a five minute presentation.

Mrs. Abbey stated there is an evaluation criteria which is what you should be using to determine your choice. Cost is a consideration but you should also look at their

Minutes Acceptance: Minutes of Jan 12, 2016 5:00 PM (Approval of Minutes)

understanding of the project, the approach, the overall work plan, outreach and their experience. You don't necessarily just go for the lowest cost because you may get a lesser product.

Mr. Gorang said he especially likes the section that outlines activities for getting community involvement. He will be looking closely at this with each proposal.

Mrs. Abbey stated that was something that the board expressed concern with and that was the main reason for having this in the RFP.

Mr. Gorang said Mrs. Abbey did an excellent job putting the RFP together.

Mr. Walls acknowledged Councilman Smith. He asked if he would like to make a comment.

Mr. Smith thanked the Planning Board on behalf of City Council. He said the Council is very excited about this master plan. We appreciate your work on this and we will support you in any way we can. Thank you for your help.

Motion to approve and authorize the Request for Proposal for the City of Burton Master Plan.

RESULT:	**CARRIED [UNANIMOUS]**
MOVER:	Robert Johnson, Commissioner
SECONDER:	Deb Walton, Vice-Chairman
AYES:	Walls, Burge, Centilli, White, Johnson, Gorang, Walton
EXCUSED:	Kray, Ellenburg

G. AUDIENCE PARTICIPATION

None.

H. ADMINISTRATIVE SITE PLAN REVIEW

1. SPR #15-56

By: Dollar Express Store, LLC.
7520 E. Independence Blvd. Suite 100
Charlotte, NC 28227

Re: 1181 Bristol Rd. Burton, MI 48529

For: Retail sales

2. SPR #15-57

By: Esphen Scott
1096 N. Center Rd. Suite 120

Minutes Acceptance: Minutes of Jan 12, 2016 5:00 PM (Approval of Minutes)

Burton, MI 48509

Re: 1096 N. Center

For: Wholesale Automobiles

3. SPR #15-58

By: Gary Hubley
1096 N. Center Rd. Suite 119
Burton, MI 48509

Re: 1096 N. Center

For: Wholesale Automobiles

4. SPR #15-59

By: Daniel Barton
1096 N. Center Rd. Suite 110
Burton, MI 48509

Re: 1096 N. Center

For: Wholesale Automobiles

5. SPR #15-60

By: Michael Jarrett
1096 N. Center Rd. Suite 111
Burton, MI 48509

Re: 1096 N. Center

For: Wholesale Automobiles

6. SPR #15-61

By: Andrew Spencer
1096 N. Center Rd. Suite 112
Burton, MI 48509

Re: 1096 N. Center

For: Wholesale Automobiles

Minutes Acceptance: Minutes of Jan 12, 2016 5:00 PM (Approval of Minutes)

7. SPR #15-62

By: Raymond Powell
1096 N. Center Rd. Suite 101
Burton, MI 48509

Re: 1096 N. Center

For: Wholesale Automobiles

8. SPR #15-63

By: Jerry Drudi
4463 S. Dort Hwy.
Burton, MI 48529

Re: 4463 S. Dort Hwy.
Burton, MI 48529

For: Used Car Sales Lot

9. SPR #15-64

By: Jeffrey Mayer
3260 N. Henderson Rd.
Davison, MI 48423

Re: 3063 Kleinpell St.
Burton, MI 48529

For: Office for Trucking Company

10. SPR #15-65

By: Goodwill Industries of Mid Mi, Inc.
501 S. Averill Ave.
Flint, MI 48506

Re: 2188 S. Center Rd. Burton, MI 48519

For: Change from retail to office

Minutes Acceptance: Minutes of Jan 12, 2016 5:00 PM (Approval of Minutes)

11. SPR #15-66

By: KT Java
4190 E. Court St.
Burton, MI 48509

Re: 4190 E. Court St. Burton, MI 48509

For: Coffee Shop

12. SPR #15-68

By: Sean Hudson
1096 N. Center Rd. Suite 121
Burton, MI 48509

Re: 1096 N. Center

For: Wholesale Automobiles

13. SPR #15-69

By: Atanas Zelevarouski
5506 Lapeer Rd.
Burton, MI 48509

Re: 5506 Lapeer Rd. Burton, MI 48509

For: Building to be used for storage only

14. SPR #15-70

By: Lynnda Squires
5118 Hartland Dr.
Flint, MI 48506

Re: 1350 N. Belsay Rd.
Burton, MI 48509

For: Child Care

I. BOARD DISCUSSION

Mr. Burge stated items two through seven under Administrative Site Plan Review are all the same address. Are they all different owners with this project?

Minutes Acceptance: Minutes of Jan 12, 2016 5:00 PM (Approval of Minutes)

Mrs. Abbey said this is the old shooting range. They will have an office and each individual wholesale dealer in the office has to hold a license so they have to obtain zoning approval. These are administrative approvals so they have been approved by me. They are on the agenda for your knowledge not action.

Mr. Walls asked how many wholesale businesses we are going to have in Burton. It seems popular lately.

Mrs. Abbey stated it is very popular right now.

Mrs. White said we approved the location on Davison Road and Covert Road. The agreement was they would have a privacy fence between the residential home and the business and the cars would be parked behind the fence. They currently have no fence and the cars are stacked out to Davison Road.

Mrs. Abbey will go check it out.

Mr. Johnson said the Fire Department had a call to that address and there was close to 300 cars packed to the fences on all four walls and only one entrance/exit.

Mrs. Abbey said they are supposed to keep isle ways. She will contact them.

Mr. Johnson asked regarding the former shooting range on Center Road, is the plan for them to store vehicles in the customer lot or behind the building?

Mrs. Abbey said the intent was for them to park behind the fence for security purposes but it is their choice.

Mrs. Walton stated Elite Auto at the corner of Bristol Road and N. Grand Traverse Street has vehicles hanging over the sidewalk. They now have cars parked on the grassy area.

Mrs. Abbey will pass this information on to the Code Enforcer.

The next regularly scheduled meeting will be held on Tuesday, February 9, 2016 at 5:00 p.m.

Meeting was adjourned at 5:48 PM.

SPR #16-06

By: Timothy Bertram
1330 Kenneth St.
Burton, MI 48529

Re: 59-30-578-228 and 59-30-578-307 to be combined
1330 Kenneth and 1328 Kenneth to be combined
Burton, MI 48529

For: Addition to existing assisted livening facility

ATTACHMENTS:

- 16-06 (PDF)

RESULT:	**CARRIED [UNANIMOUS]**
MOVER:	Kevin Burge, Commissioner
SECONDER:	Ellen Ellenburg, Councilwoman
AYES:	Ellenburg, Walls, Burge, Centilli, White, Johnson, Gorang, Walton
EXCUSED:	Greg Kray

City of Burton

Department of Public Works
4093 Manor Drive
Genesee County, Burton, Michigan 48519
(810) 742-9230

APPLICATION FOR SITE PLAN REVIEW

DATE FILED: 1-26-16
FEE: 200.00
RECEIPT NO: _____
CHECK NO: 1474

SPR #: 16-06

PLEASE PRINT

DATE OF PLANNING COMMISSION MEETING: Feb, 9th, 2016 TIME: 5:00pm

APPLICANTS NAME: Timothy Bertram

APPLICANTS ADDRESS: 1330 Kenneth St
Burton, MI 48529

APPLICANTS PHONE NO: 810-348-5923

PROPOSED NAME OF BUSINESS: Bertram Hvac

SITE ADDRESS: 1330 Kenneth St

SUBDIVISION & LOT # OR PARCEL NUMBER: 59-30-578-228, 59-30-578-307

RE: Addition to Bldg.

APPLICANT: IT IS TO YOUR ADVANTAGE TO ATTEND THE ABOVE SCHEDULED MEETING. THE PLANNING COMMISSION MAY HAVE QUESTIONS THAT DIRECTLY AFFECT APPROVAL, DENIAL, OR POSTPONING UNTIL THESE QUESTIONS CAN BE ANSWERED.

APPLICANTS SIGNATURE: Timothy Bertram

NOTE: All site plans must be filed at least two (2) weeks prior to the Planning Commission hearing and **MUST** comply with the procedures set forth in Section 157.092 of Codified Ordinance as attached. Must include **twelve (12) sets** of prints in order to process the application.

Attachment: 16-06 (2117 : SPR #16-06)

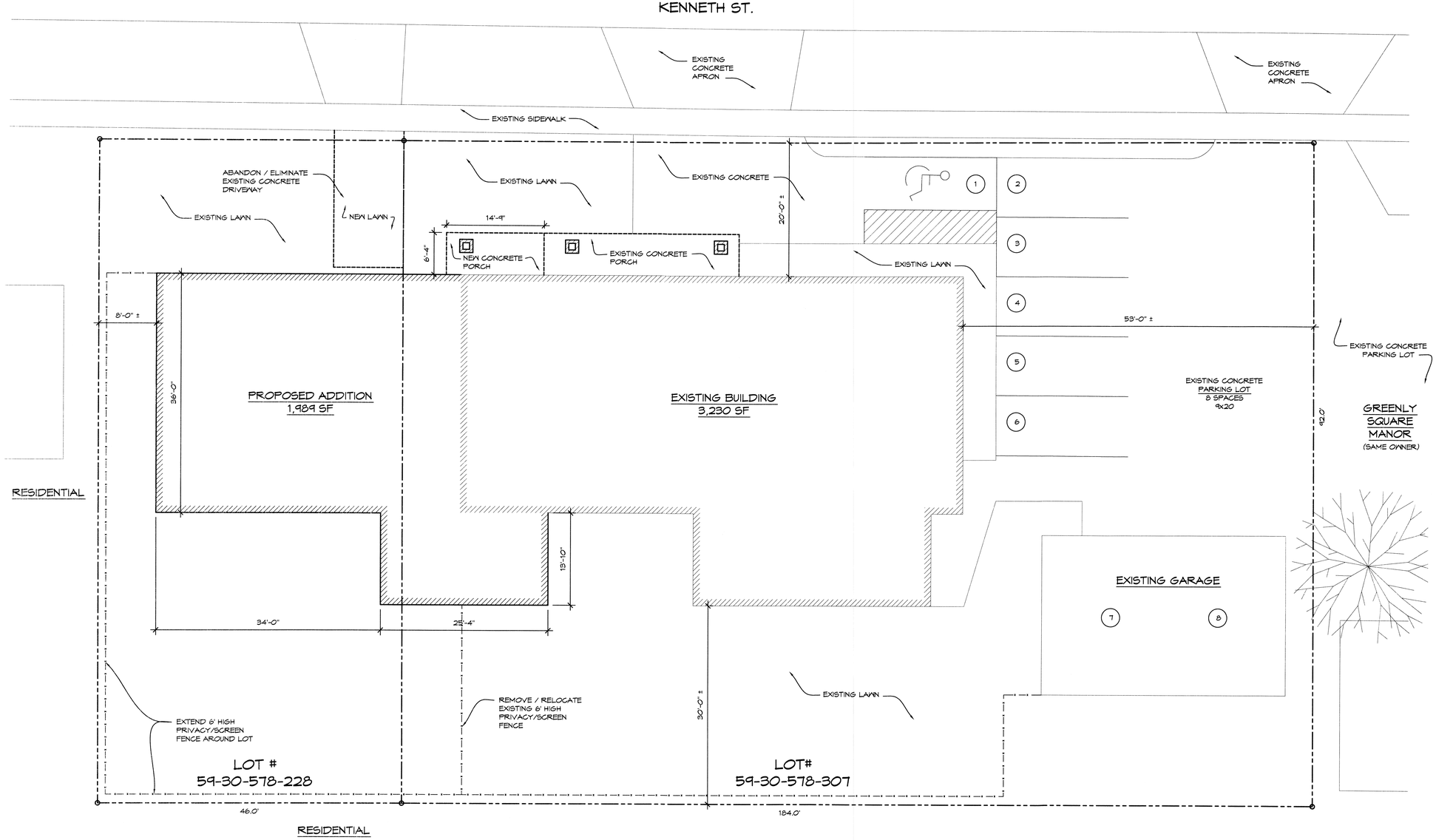

N

PROPOSED
SITE DEVELOPMENT PLAN

1/8" = 1'-0"

H2A architects
9100 Lapeer Rd. Suite B
Davison, MI 48423
(810) 412-5640

KEY

(1) PARKING SPACE DESIGNATION - 9' x 20'

NOTES

PROPERTY = R1-C
ZONED = SPECIAL LAND USE

SETBACKS:		PROVIDED:	
FRONT	20'-0"	20'-0"	OK
REAR	30'-0"	30'-0"	OK
SIDE 1	5'-0"	8'-0"	OK
SIDE 2	15'-0"	53'-0"	OK

PARKING:
REQUIRED = 8 (12 UNITS / 2 + 2 EMPLOYEES)
PARKING:
PROVIDED = 8 (INCLUDES 1 PH SPACE)

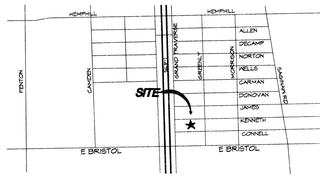

N

LOCATION MAP

NO SCALE

NO.	DESCRIPTION	DATE
6		
5		
4		
3		
2		
1		

ADDITION TO:
BERTRAM HAUS OF BURTON
1330 KENNETH
BURTON, MICHIGAN

DRAWING TITLE
SITE PLAN

PROJECT NO. 15-310
DATE 1-26-16
DRAWN EHD
CHECKED SAA

C101

CAD FILE NO. C101
SCALE 1/8" = 1'-0"
SHEET 2 OF 2

Z:\Projects\Roo Aspen\15-310 1330 Kenneth\Site Plan Review\A101.dwg
PLOT DATE: 1/26/2016 3:30 PM

Attachment: 16-06 (2117 : SPR #16-06)

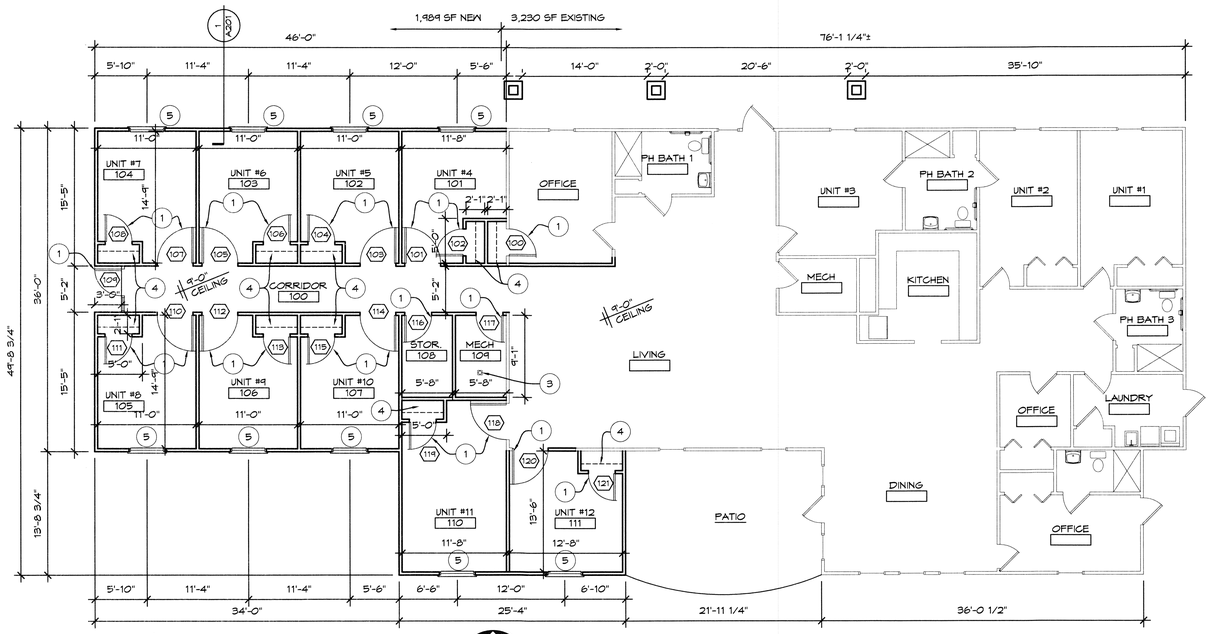

N

PROPOSED
FLOOR PLAN

1/8" = 1'-0"

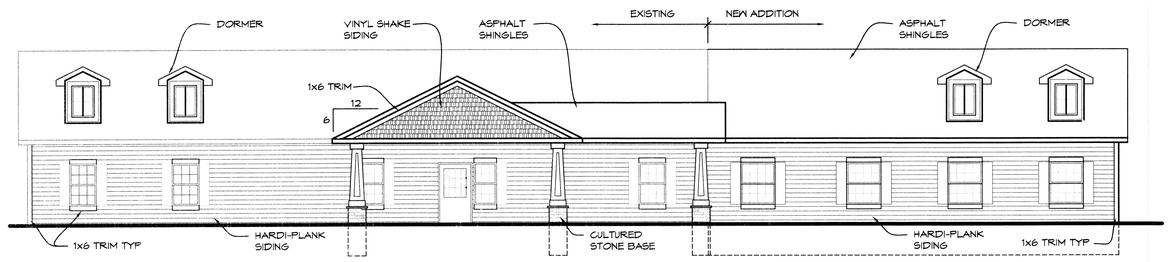

NORTH ELEVATION

1/8" = 1'-0"

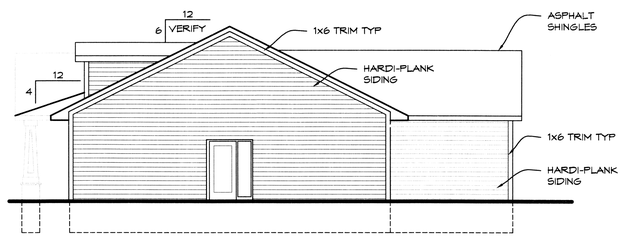

WEST ELEVATION

1/8" = 1'-0"

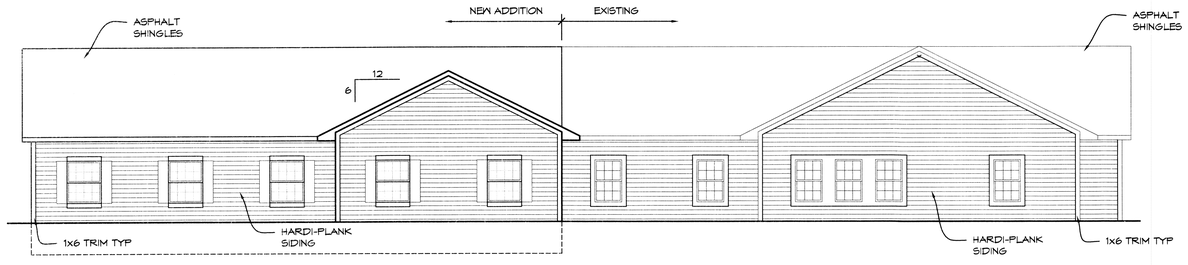

SOUTH ELEVATION

1/8" = 1'-0"

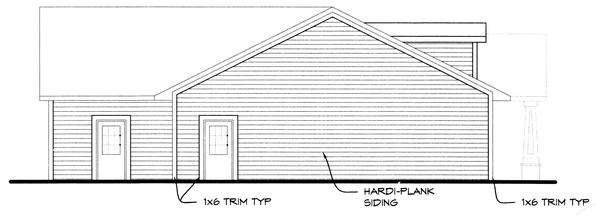

EAST ELEVATION

1/8" = 1'-0"

H2A architects
9100 Lapeer Rd. Suite B
Davison, MI 48423
(810) 412-5640

CONSTRUCTION NOTES

1. NEW DOOR AND FRAME
2. INFILL EXISTING OPENING, MATCH WALL THICKNESS AND FINISH
3. FLOOR DRAIN
4. ROD AND SHELF
5. EGRESS WINDOW (TW3046 ANDERSON)

NO.	DESCRIPTION	DATE
6		
5		
4		
3		
2		
1		

ADDITION TO:

BERTRAM HAUS OF BURTON

1330 KENNETH
BURTON, MICHIGAN

DRAWING TITLE

PROPOSED FLOOR PLAN AND ELEVATIONS

PROJECT NO. 15-310

DATE 1-26-16

DRAWN EHD

CHECKED SAA

A101

CAD FILE NO. A101

SCALE 1/8" = 1'-0"

SHEET 1 OF 2

Z:\Projects\Rob Agree\15-310 1330 Kenneth\Site Plan Review\A101.dwg

PLOT DATE: 1/26/2016 3:02 PM

Attachment: 16-06 (2117 : SPR #16-06)

SPR #16-07

By: Bruce Calhoun
1111 Creekwood Trl.
Burton, MI 48509

Re: 1070 Creekwood
Burton, MI 48509
59-11-551-007

For: Construction of a new office building

ATTACHMENTS:

- 16-07 (PDF)

RESULT:	**CARRIED AS AMENDED [UNANIMOUS]**
MOVER:	Robert Johnson, Commissioner
SECONDER:	Tom Gorang, Commissioner
AYES:	Ellenburg, Walls, Burge, Centilli, White, Johnson, Gorang, Walton
EXCUSED:	Greg Kray

City of Burton

Department of Public Works
4093 Manor Drive
Genesee County, Burton, Michigan 48519
(810) 742-9230

APPLICATION FOR SITE PLAN REVIEW

DATE FILED: 1-27-16
FEE: $ 400.00
RECEIPT NO:
CHECK NO: 106

SPR #: 16-07

PLEASE PRINT

DATE OF PLANNING COMMISSION MEETING: February 9th 2016 @ 5:00

APPLICANTS NAME: BRUCE CALHOUN

APPLICANTS ADDRESS: 1111 CREEKWOOD TRAIL

APPLICANTS PHONE NO: 810 742 0480

PROPOSED NAME OF BUSINESS (CJW GROUP LLC) WALKE, JUNE, CALHOUN CPA'S.

SITE ADDRESS: 1070 CREEKWOOD TRAIL

SUBDIVISION & LOT # OR PARCEL NUMBER: 59-11-551-007

LOTS 8 & 9 OF CREEKWOOD PROFESSIONAL VILLAGE

RE: Construction of a New office Bldg.

APPLICANT: IT IS TO YOUR ADVANTAGE TO ATTEND THE ABOVE SCHEDULED MEETING. THE PLANNING COMMISSION MAY HAVE QUESTIONS THAT DIRECTLY AFFECT APPROVAL, DENIAL, OR POSTPONING UNTIL THESE QUESTIONS CAN BE ANSWERED.

APPLICANTS SIGNATURE: Bruce Calhoun

NOTE: All site plans must be filed at least two (2) weeks prior to the Planning Commission hearing and **MUST** comply with the procedures set forth in Section 157.092 of Codified Ordinance as attached. Must include **twelve (12) sets** of prints in order to process the application.

Attachment: 16-07 (2118 : SPR #16-07)

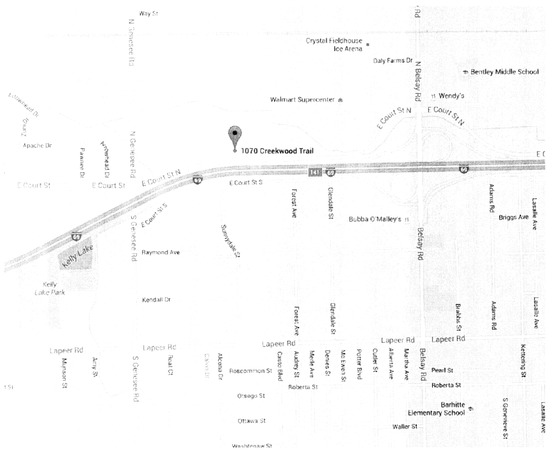

LOCATION MAP
N.T.S.

NORTH

BUILDING DEPARTMENT

CITY OF BURTON BUILDING DEPT.
4303 CENTER RD.
BURTON, MI 48519
TELEPHONE (810) 743-1500

OWNER

CJW GROUP L.L.C.
1200 CREEKWOOD TRAIL
BURTON, MI. 48509
TELEPHONE (810)743-5000
contact
TAMMY CALHOUN/ROBIN JUNE
tammy@walkerjunecalhoun.com
robin@walkerjunecalhoun.com

ARCHITECT:

CREEKWOOD ARCHITECTURE, INC.
1111 CREEKWOOD TRAIL
BURTON, MI. 48509
TELEPHONE (810) 742-0480
FAX (810) 742-8393
bcalhoun@creekwoodarch.com

10 STANDARD NOTES FOR PRELIMINARY PLATS AND SITE PLANS

1. EXTENSION OF PUBLIC UTILITIES: All public sanitary sewer and/or water main SHALL be extended to the furthest limits of the property, including corner lots, with the pipe size and material approved by GCDC-WWS. This is necessary for plan approval. For water service of 1" or less or a building on a corner lot, the requirements to extend the public water main and/or sanitary sewer along both property lines will be reviewed. Final determination shall be made by GCDC-WWS.
2. WATER MAIN LOOPING: All public watermains shall be looped whenever possible. The pipe sizing shall be approved by GCDC-WWS.
3. INDUSTRIAL PRETREATMENT PROGRAM(IPP): This permit is for all commercial and industrial discharges. The OWNER shall obtain an Industrial Pretreatment Discharge Permit prior to the issuance of a Sewer Connection Permit. Industrial Discharge Permits are non-transferable. Changes in facility use will require a new Industrial Discharge Permit.
4. SOIL EROSION: The DEVELOPER shall submit a detailed Soil Erosion and Sedimentation Control plan and obtain an Act 451 part 91, Soil Erosion and Sedimentation Control permit. This includes the payment of fees and the providing of necessary bonds. No earth changes or excavation shall be started prior to the issuance of this permit. The DEVELOPER shall protect all existing and proposed storm sewer facilities on and adjacent to the site during excavation and construction. All sediment shall be contained on site. Any silt in county drains, storm sewer, culverts, etc. as a result of this project, shall be removed by the DEVELOPER at the cost of the DEVELOPER.
5. FLOOD PLAIN OR WETLAND CONSTRUCTION: The DEVELOPER shall apply to the Michigan Department of Environmental Quality for a permit for the alteration and/or occupation of a flood plain or flood way, as required under PA 451. Evidence of this permit may be required prior to plan approval by GCDC-WWS.
6. NPDES STORM WATER DISCHARGE PERMIT: The owner of the property shall obtain a NPDES Storm Water Discharge permit for construction activities from MDEQ as required under Public Act 451. The notice of coverage form shall be submitted through GCDC-WWS with the Soil Erosion Control permit application. All MDEQ fees shall accompany the Notice of Coverage. Evidence of this permit may be required prior to plan approval by GCDC-WWS.
7. GENESEE COUNTY PERMIT TO CONSTRUCT A PUBLIC UTILITY: After the approval of this preliminary plat or site plan, the DEVELOPER shall submit a detailed plan for construction of all public sanitary sewer and watermain. The plans must have GCDC-WWS approval, an S-permit issued, and approval from the MDEQ prior to beginning construction.
8. M.D.O.T MICHIGAN DEPARTMENT OF TRANSPORTATION: The DEVELOPER shall obtain a permit from the MDOT to perform work within the MDOT Right-of-Way. All fees for the permit, bonds and insurances are the responsibility of the developer.
9. MUNICIPALITY SANITARY SEWER AND WATER PERMIT: Prior to the issuance of a building permit by the local municipality, the developer shall be required to obtain a sanitary sewer and/or water tap-in permit from the local municipality, if authorized, or GCDC-WWS.
10. STATE CONSTRUCTION PERMITS: The sanitary sewer and water main construction permit application from the Michigan Department of Environmental Quality (MDEQ) shall be submitted to the MDEQ after receiving approval from GCDC-WWS. Construction shall not begin until these state permits are issued.

NEW BUILDING
for:
CJW GROUP L.L.C.
WALKER,JUNE,CALHOUN C.P.A'S
1070 CREEKWOOD TRAIL
BURTON, MICHIGAN 48509

TAX #59-11-551-007

REFERENCE BENCHMARK PER PLAN
SOUTH RIM OF SANITARY MANHOLE
ELEV 767.24 USGS LOCAL DATUM

LEGAL DESCRIPTION PROVIDED

PARCEL 1
Lot 9 except the North 28.00 feet and except the South 15.00 feet of CREEKWOOD PROFESSIONAL VILLAGE, according to the recorded Plat thereof as recorded in Liber 58 of Plats on Pages 49 and 50, Genesee County, Michigan Records. All being part of Section 11, T7N-R7E, City of Burton, Genesee County, Michigan.

PARCEL 2
Lot 8 and the North 28.00 feet of Lot 9 of CREEKWOOD PROFESSIONAL VILLAGE, according to the recorded Plat thereof as recorded in Liber 58 of Plats on Pages 49 and 50, Genesee County, Michigan Records. All being part of Section 11, T7N-R7E, City of Burton, Genesee County, Michigan.

EASEMENT STATEMENT

ALL PUBLIC SANITARY SEWER AND PUBLIC WATER MAINS SHALL HAVE AN EASEMENT GRANTED TO THE AGENCY OR MUNICIPALITY FOR MAINTENANCE, REPAIR, AND/OR REPLACEMENT. FOR CONDOMINIUMS, THE EASEMENT SHALL BE RECORDED ON THE MASTER DEED DOCUMENT AND FOR A SUBDIVISION, THE EASEMENT SHALL BE NOTED ON THE FINAL RECORDED PLAT. ALL OTHERS SHALL BE RECORDED ON STANDARD GCDC EASEMENT DOCUMENTS.

N.P.D.E.S. STATEMENT

THERE WILL BE LESS THAN 5.0 ACRES DISTURBED, THEREFORE AN N.P.D.E.S. PERMIT IS NOT REQUIRED.

CONTRACTOR ALERT STATEMENT

THIS PROJECT HAS BEEN DESIGNED USING THE LATEST G.C.D.C. CRITERIA, REVIEW THE NOTES, DETAILS, AND DESIGN CAREFULLY PRIOR TO SUBMITTING A BID. FULL COMPLIANCE WITH THE NEW STANDARDS WILL BE REQUIRED.

PUBLIC UTILITY STATEMENT

ALL SANITARY SEWER'S 8" AND LARGER IN DIAMETER AND ALL WATER MAINS 6" AND LARGER IN DIAMETER FOR THIS PROJECT ARE DESIGNED FOR AND WILL BECOME A PUBLIC SYSTEM UPON SATISFACTORY APPROVAL BY THE AGENCY OR MUNICIPALITY.

UTILITY INFORMATION, AS SHOWN, INDICATES APPROXIMATE LOCATIONS AND TYPES OF FACILITIES ONLY, AS DISCLOSED TO THIS FIRM BY THE VARIOUS UTILITY COMPANY'S RECORDS. NO GUARANTEE IS EXPRESSED OR IMPLIED AS TO THE COMPLETENESS OR ACCURACY THEREOF.

PRIOR TO CONSTRUCTION, ALL LOCATION AND DEPTHS OF EXISTING OVERHEAD AND UNDERGROUND UTILITIES (IN CONFLICT WITH THE CONSTRUCTION OF PROPOSED IMPROVEMENTS) SHALL BE VERIFIED IN FIELD. DURING CONSTRUCTION, CONTRACTOR SHALL USE EXTREME CAUTION WHEN OPERATING NEAR OVERHEAD AND/OR BURIED UTILITIES.

PLAN SUBMISSION LIST

GENESEE COUNTY DRAIN COMMISIONER-STORM DRAIN DIVISION	TOM JONES-6-4608 BEECHER ROAD, FLINT, MICHIGAN 48532
GENESEE COUNTY DRAIN COMMISIONER-DIVISION OF WATER AND WASTE SERVICES	MATT REYSIN PE-6-4610 BEECHER ROAD, FLINT, MICHIGAN 48532
BURTON TWP. BUILDING INSPECTOR	STEWART MORTHING -4608 CENTER ROAD BURTON, MI.48509
BURTON TWP. PLANNING/ZONING ADMINISTRATOR	AMBER ABBEY -4303 CENTER ROAD BURTON, MI.48509
CONSUMER ENERGY	DAVID MCDANIEL-3201 E. COURT ST. FLINT, MICHIGAN 48501
AMERITECH	PHILLIP BRAGGEY-502 BEECH ST. ROOM 402 FLINT, MICHIGAN 48502

NOTE:
THIS PROJECT HAS BEEN DESIGNED IMPLEMENTING THE LATEST GCDC-WWS DESIGN SPECIFICATIONS. CAREFULLY REVIEW THE NOTES, DETAILS AND DESIGN PRIOR TO SUBMITTING A BID. FULL COMPLIANCE WITH THE NEW STANDARDS WILL BE REQUIRED.

LIST OF DRAWINGS

COVER SHEET

SURVEY

S1 SITE PLAN
MISC. DETAILS

S2 SITE GRADING PLAN
DUMPSTER ENCLOSUR DETAILS

S3 MISC DETAILS

S4 SOIL & EROSION PLAN

S5 SOIL & EROSION KEY PLAN
LEGEND AND NOTES

S6 DETAILS

S7 DETAILS

S8 NOTES

L1 LANDSCAPE PLAN & LIGHTING PLAN

A1 FLOOR PLAN

A2 ELEVATIONS

BUILDING CODE:

BUILDING CODE -	2012 MICHIGAN BUILDING. CODE
MECHANICAL CODE -	2012 MICHIGAN MECHANICAL CODE
ELECTRICAL CODE -	2011 NATIONAL ELECTRIC CODE
PLUMBING CODE -	2012 MICHIGAN PLUMBING CODE
BARRIER FREE -	2006 MICHIGAN BARRIER FREE CODE & ICC/ANSI A117.1- 2003

REGISTERED DESIGN PROFESSIONAL
IN RESPONSIBLE CHARGE:
REGISTERED ARCHITECT
JEFFERY VANCAMP
LICENSE NO. 47808
EXPIRATION DATE 10-31-2016

STATE OF MICHIGAN
JEFFREY J. VAN CAMP
ARCHITECT
No. 47808
LICENSED ARCHITECT

BUILDING INFORMATION

BUILDING DATA:

ZONING----------	RO -RESTRICTED OFFICE
USE GROUP----------	B- BUSINESS
CONSTRUCTION TYPE-----	5B COMBUSTIBLE, NOT PROTECTED
BUILDING AREA---------	73.3ft x 53ft 3,489 SQ. FT.
MEANS OF EGRESS------	1-36"DOOR FRONT
OCCUPANT LOAD--------	(1) PER 100 SQ FT. TOTAL OCCUPANTS 93 PERSONS

DEFERRED SUBMITTALS

BUILDING SIGNAGE
(BY OTHERS)

PLAN DISTRIBUTION LIST & DATES:

	SUBMITTED	REVISIONS
CITY OF BURTON BUILDING DEPARTMENT		
SITE PLAN REVIEW	27 JAN 2016	

REVISIONS
13 JAN 2016

ARCHITECTS JOB # 15078-OF

Attachment: 16-07 (2118 : SPR #16-07)

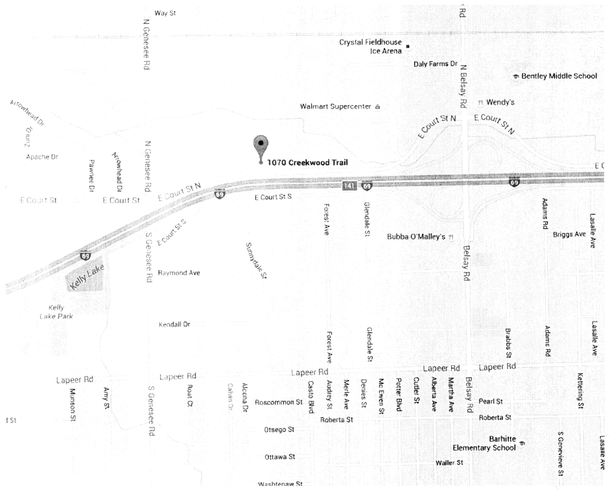

LOCATION MAP
NO SCALE

LEGAL DESCRIPTION PROVIDED

PARCEL 1
Lot 9 except the North 28.00 feet and except the South 15.00 feet of CREEKWOOD PROFESSIONAL VILLAGE, according to the recorded Plat thereof as recorded in Liber 58 of Plats on Pages 49 and 50, Genesee County, Michigan Records. All being part of Section 11, T7N–R7E, City of Burton, Genesee County, Michigan.

PARCEL 2
Lot 8 and the North 28.00 feet of Lot 9 of CREEKWOOD PROFESSIONAL VILLAGE, according to the recorded Plat thereof as recorded in Liber 58 of Plats on Pages 49 and 50, Genesee County, Michigan Records. All being part of Section 11, T7N–R7E, City of Burton, Genesee County, Michigan.

GRAPHIC SCALE
(IN FEET)
1 inch = 20 ft.

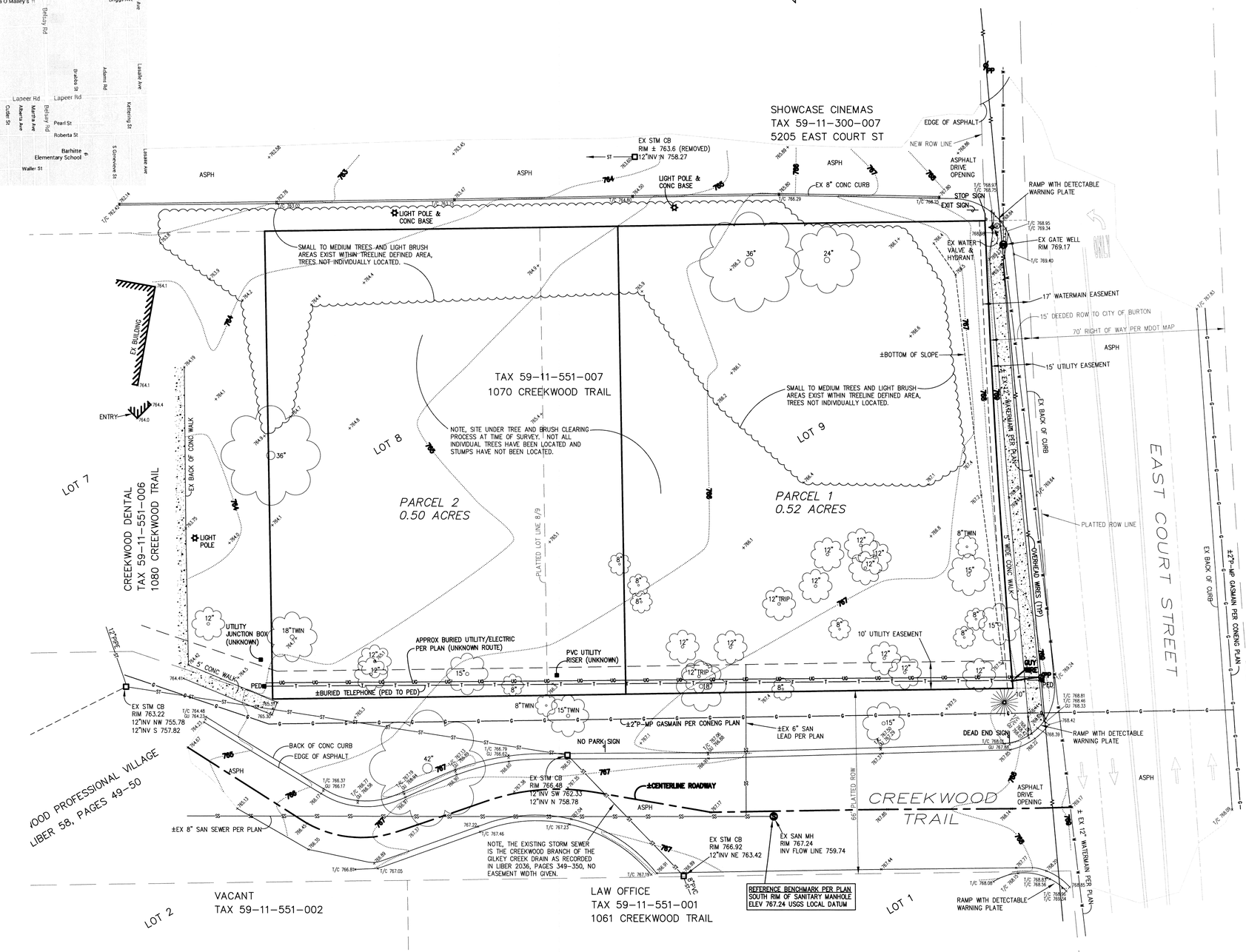

LEGEND

- FOUND IRON
- SET IRON
- FOUND MONUMENT
- SET MONUMENT
- (R) RECORDED
- (M) MEASURED
- (C) CALCULATED
- SECTION CORNER

EXISTING

- ST — STORM SEWER & MANHOLE
- SS — SANITARY SEWER & MANHOLE
- W — WATERMAIN, HYDRANT, & GATE VALVE
- G — GAS MAIN & VALVE
- T — BURIED TELEPHONE (MISS DIG MARKERS = ⓣ)
- E — UNDER GROUND ELECTRIC (MISS DIG MARKERS = ⓔ)
- OVERHEAD ELECTRIC, POLE, & GUY WIRE
- CATCH BASIN (CURB & ROUND)
- 765 — CONTOUR LINE
- FENCE
- WELL
- LIGHT POLE
- POST
- SIGN
- STREET SIGN
- MAILBOX
- CONCRETE
- ASPHALT
- TREES

811 Know what's below. Calbefore you dig.

UTILITY WARNING

UNDERGROUND UTILITY LOCATIONS AS SHOWN ON THE PLANS WERE OBTAINED FROM UTILITY OWNERS, AND WERE NOT FIELD LOCATED. A MINIMUM OF THREE (3) WORKING DAYS PRIOR TO BEGINNING CONSTRUCTION, THE CONTRACTOR SHALL NOTIFY "MISS DIG" (1–800–482–7171) AND HAVE ALL UNDERGROUND UTILITIES STAKED BEFORE ANY WORK MAY BEGIN. THE CONTRACTOR SHALL BE RESPONSIBLE FOR THE PROTECTION AND/OR RELOCATION OF ALL UTILITIES THAT MAY INTERFERE WITH CONSTRUCTION. THREE (3) WORKING DAYS BEFORE YOU DIG – CALL MISS DIG (1–800–482–7171).

UTILITY INFORMATION, AS SHOWN, INDICATES APPROXIMATE LOCATIONS AND TYPES OF FACILITIES ONLY, AS DISCLOSED TO THIS FIRM BY THE VARIOUS UTILITY COMPANY'S RECORDS. NO GUARANTEE IS EXPRESSED OR IMPLIED AS TO THE COMPLETENESS OR ACCURACY THEREOF.

PRIOR TO CONSTRUCTION, ALL LOCATION AND DEPTHS OF EXISTING OVERHEAD AND UNDERGROUND UTILITIES (IN CONFLICT WITH THE CONSTRUCTION OF PROPOSED IMPROVEMENTS) SHALL BE VERIFIED IN FIELD. DURING CONSTRUCTION, CONTRACTOR SHALL USE EXTREME CAUTION WHEN OPERATING NEAR OVERHEAD AND/OR BURIED UTILITIES.

Davison Land Surveying, Inc.
1063 South State Street, Suite 9
Davison, MI 48423
Office (810)653–5969 Fax (810)658–9388

REVISIONS

No.	Description	Date	By
1	PARCEL 1–2 SPLIT UPDATE	12–11–15	RJV

SURVEYOR:
Drawn by: R.J.V. | Field: C.L., R.V.
Designed by: N/A | Checked by: W.P.M.
Date: 12/02/15 | Date Revised: 12/11/15
Charles T. Lillieberg P.S. No. 40162
JOB No. 15–132

TOPOGRAPHICAL SURVEY FOR
1070 CREEKWOOD TRAIL
SECTION 11, T7N–R7E, CITY OF BURTON, GENESEE CO.
CLIENT: CREEKWOOD ARCHITECTURE
1111 CREEKWOOD TRAIL
BURTON, MI 48529

15–132

SHEET NO. 1 OF 1

Attachment: 16-07 (2118 : SPR #16-07)

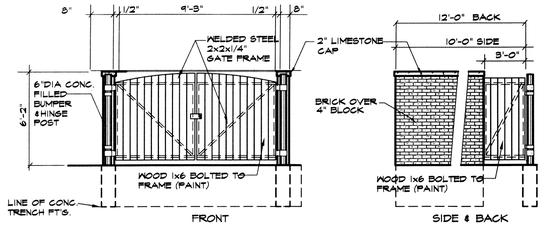

DUMPSTER ENCLOSURE ELEVATIONS

LEGAL DESCRIPTION PROVIDED

PARCEL 1

Lot 9 except the North 28.00 feet and except the South 15.00 feet of CREEKWOOD PROFESSIONAL VILLAGE, according to the recorded Plat thereof as recorded in Liber 58 of Plats on Pages 49 and 50, Genesee County, Michigan Records. All being part of Section 11, T7N–R7E, City of Burton, Genesee County, Michigan.

PARCEL 2

Lot 8 and the North 28.00 feet of Lot 9 of CREEKWOOD PROFESSIONAL VILLAGE, according to the recorded Plat thereof as recorded in Liber 58 of Plats on Pages 49 and 50, Genesee County, Michigan Records. All being part of Section 11, T7N–R7E, City of Burton, Genesee County, Michigan.

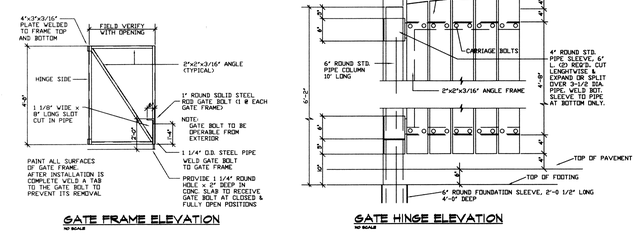

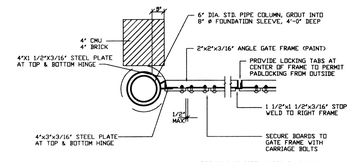

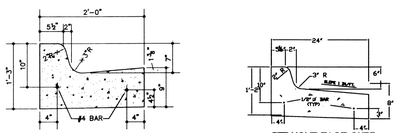

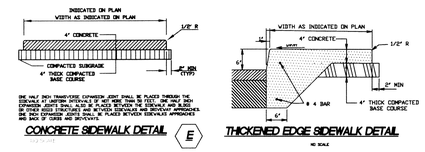

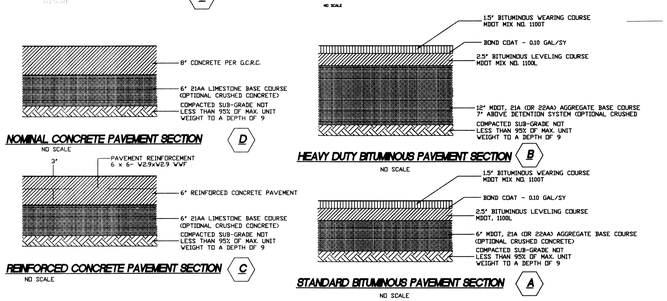

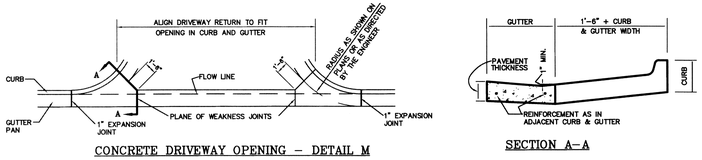

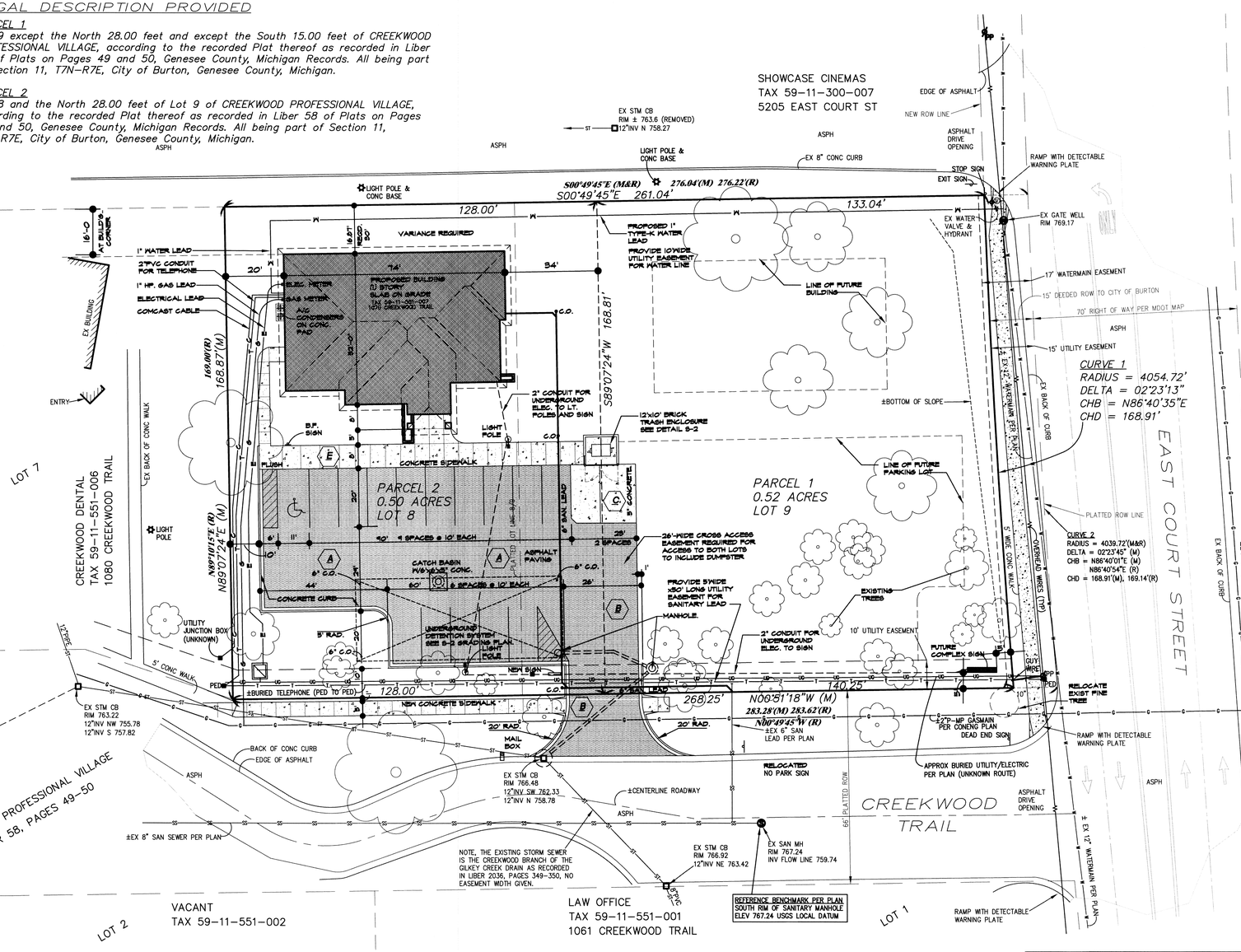

GENERAL NOTES

SESC APPLICATION & ASSOCIATED FEES TO BE PAID BY CONTRACTOR PRIOR TO START OF CONSTRUCTION

CCIP CHARGES ARE TO BE PAID FOR THE WATER AND SANITARY SERVICES BY THE CONTRACTOR PRIOR TO START OF CONSTRUCTION

CONTRACTOR MUST OBTAIN A PERMIT FROM THE GENESEE COUNTY WATER & WASTE DIVISION PRIOR TO ANY RELOCATION OF FIRE HYDRANTS, AND ANY MANHOLE ADJUSTMENTS.

UTILITY CONNECTIONS:

SANITARY SEWER TO BE CONNECTED W/ NEW 6" SDR-26 PVC SAN. LEAD.
THE DEVELOPER SHALL
OBTAIN THE REQUIRED MUNICIPALITY SANITARY SEWER PERMIT AND PAY THE DIVISION OF WAS THE REQUIRED FEE.

SEE DETAIL NO. SD-9 ON GCWWS DETAIL SHT FOR SANITARY SEWER CONECTION

SEE DETAIL NO. SD-15 ON GCWWS DETAIL SHT FOR WATER LINE CONNECTION

SANITARY NOTES:

PROVIDE SANITARY SEWER CLEANOUTS EVERY 90' MAX. AND AT ALL BENDS (SEE PLAN FOR LOCATIONS)

NORTH

SITE PLAN

SCALE: 1"=20'-0"

0 20' 40' 60'

Scale 1"=20'

811

Know what's below.
Calbefore you dig.

SITE DATA

PRESENT ZONING	RO (RESTRICTED OFFICE)
ADJACENT ZONING	C2 (GENERAL COMMERCIAL)
PROPERTY SIZE	128.0'x168.87' 21612 SQ. FT. = .50 ACRES
BUILDING AREA	3,689 SQ. FT. UNDER 50 OCCUPANT LOAD
% OF LAND COVERAGE	16% BUIULDING 60% HARD SURFACE INCLUDING BUIULDING
PARKING REQD.	ONE (1) SPACE PER EVERY 200 SQ. FT OF GROSS FLOOR AREA =17 SPACES
PARKING PROVIDED	17 SPACES INCLUDING (1) BARRIER FREE SPACE
DUMPSTER PICK UP	DUMPSTER PICK UP BEFORE BUSINESS HOURS

CREEKWOOD ARCHITECTURE, INC.
1111 s. creekwood burton, michigan 48509
tel. (810) 742–0480 fax (810) 742–8393

REVISIONS

SHEET TITLE
SITE PLAN
MISC DETAILS

PROJECT
NEW OFFICE BUILDING for WALKER JUNE CALHOUN CPA's
CREEKWOOD TRAIL BURTON, MI.

DRAWN BY B.A.G. CHECKED BY R.A.S.

JOB NO. 150001-OP

DATE 12 OCT 2015

SHEET NO.
S1
OF 5

Attachment: 16-07 (2118 : SPR #16-07)

new
Property Length (L)
Property Width (W)
Coefficient (C) 0.2

Area (A) 0.49 Acres

Q allow 0.10 CFS Qa=C*I*A

PROPOSED RUNOFF

Highwater Design	763.50	
Existing Storm Sewer	760	
Height	3.5	
Length of Outlet	20	
Diameter of Outlet	0.125	*1.5" Dia. Restrictor*
Slope of Pipe (Sp)	0.350	
Pipe Material (n)	0.01	from charts
Pipe Area	0.0123	
Pipe Hydraulic Radius	0.031	
~~Q design (mannings)~~	~~0.11 CFS~~	~~Qd=(1.486*(A*(RA.67)~~
Orifice Flow	**0.10**	

OUTLET TO EXISTING SEWER

	Sq. Ft.	Factor	Weighted Factor
Grass	8538	0.2	1707.6
Pavement	9584	0.9	8625.6
Buildings/Future	3489	0.9	3140.1
	21611.0		13,473

Weighted Coeff. (Cw) 0.62

DETERMINATION OF DETENTION VOLUME 100 Year

TC (Min.)	i (In/Hr)	Cw A A in Acre	Q in (CFS)	Q out (CFS)	Qin - Qout (CFS)	Volume (CF)
10	5.77	0.31	1.76	0.10	1.66	998
20	4.60	0.31	1.41	0.10	1.31	1566
30	3.90	0.31	1.19	0.10	1.09	1965
40	3.40	0.31	1.04	0.10	0.94	2253
50	3.00	0.31	0.92	0.10	0.82	2449
60	2.70	0.31	0.82	0.10	0.72	2609
70	2.50	0.31	0.76	0.10	0.66	2788
80	2.30	0.31	0.70	0.10	0.60	2893
90	2.10	0.31	0.64	0.10	0.54	2924
100	1.90	0.31	0.58	0.10	0.48	2883
110	1.80	0.31	0.55	0.10	0.45	2969
120	1.70	0.31	0.52	0.10	0.42	3019
130	1.60	0.31	0.49	0.10	0.39	3032
140	1.50	0.31	0.46	0.10	0.36	3009
150	1.45	0.31	0.44	0.10	0.34	3087
160	1.4	0.31	0.43	0.10	0.33	3146
170	1.3	0.31	0.40	0.10	0.30	3031
180	1.25	0.31	0.38	0.10	0.28	3044
190	1.2	0.31	0.37	0.10	0.27	3039
200	1.15	0.31	0.35	0.10	0.25	3016
210	1.1	0.31	0.34	0.10	0.24	2974
220	1	0.31	0.31	0.10	0.21	2712
230	0.95	0.31	0.29	0.10	0.19	2625
240	0.93	0.31	0.28	0.10	0.18	2651

Min. Volume to be Stored: 3146 CF

Underground Detention Field-

6 runs of 36" @ 65' each	390 lf	2757 cf
2 runs of 36" header @ 31'	62 lf	438 cf
		3195 CF

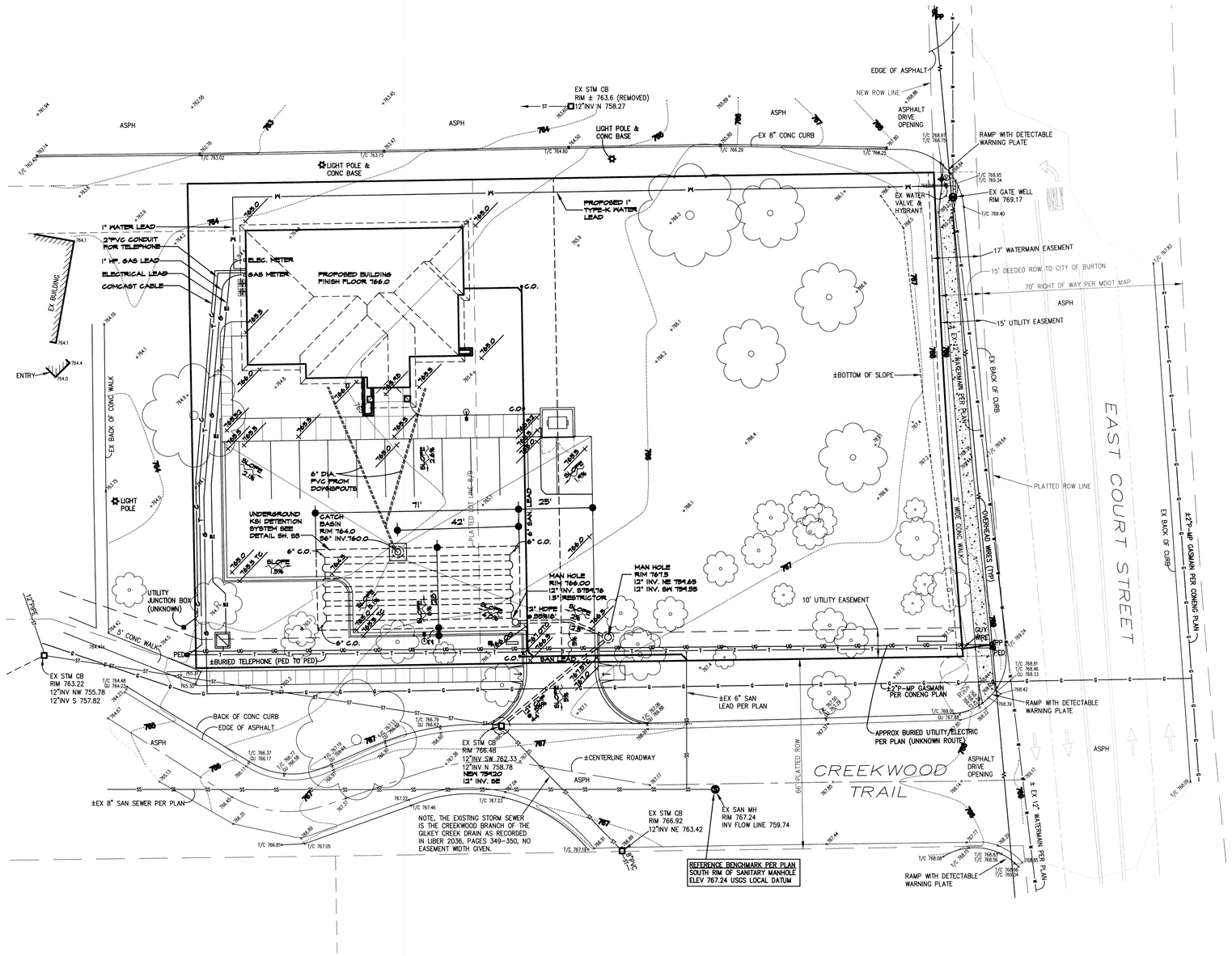

LEGEND

- FOUND IRON
- SET IRON
- FOUND MONUMENT
- SET MONUMENT
- (R) RECORDED
- (M) MEASURED
- (C) CALCULATED
- SECTION CORNER

EXISTING

- ST — STORM SEWER & MANHOLE
- SS — SANITARY SEWER & MANHOLE
- W — WATERMAIN, HYDRANT, & GATE VALVE
- G — GAS MAIN & VALVE
- T — BURIED TELEPHONE (MISS DIG MARKERS =)
- E — UNDER GROUND ELECTRIC (MISS DIG MARKERS =)
- OVERHEAD ELECTRIC, POLE, & GUY WIRE
- CATCH BASIN (CURB & ROUND)
- 765 — CONTOUR LINE
- FENCE
- WELL
- LIGHT POLE
- POST
- SIGN
- STREET SIGN
- MAILBOX
- CONCRETE
- ASPHALT
- TREES

UTILITY WARNING

UNDERGROUND UTILITY LOCATIONS AS SHOWN ON THE PLANS WERE OBTAINED FROM UTILITY OWNERS, AND WERE NOT FIELD LOCATED. A MINIMUM OF THREE (3) WORKING DAYS PRIOR TO BEGINNING CONSTRUCTION, THE CONTRACTOR SHALL NOTIFY "MISS DIG" (1-800-482-7171) AND HAVE ALL UNDERGROUND UTILITIES STAKED BEFORE ANY WORK MAY BEGIN. THE CONTRACTOR SHALL BE RESPONSIBLE FOR THE PROTECTION AND/OR RELOCATION OF ALL UTILITIES THAT MAY INTERFERE WITH CONSTRUCTION. THREE (3) WORKING DAYS BEFORE YOU DIG – CALL MISS DIG (1-800-482-7171).

UTILITY INFORMATION, AS SHOWN, INDICATES APPROXIMATE LOCATIONS AND TYPES OF FACILITIES ONLY, AS DISCLOSED TO THIS FIRM BY THE VARIOUS UTILITY COMPANY'S RECORDS. NO GUARANTEE IS EXPRESSED OR IMPLIED AS TO THE COMPLETENESS OR ACCURACY THEREOF.

PRIOR TO CONSTRUCTION, ALL LOCATION AND DEPTHS OF EXISTING OVERHEAD AND UNDERGROUND UTILITIES (IN CONFLICT WITH THE CONSTRUCTION OF PROPOSED IMPROVEMENTS) SHALL BE VERIFIED IN FIELD. DURING CONSTRUCTION, CONTRACTOR SHALL USE EXTREME CAUTION WHEN OPERATING NEAR OVERHEAD AND/OR BURIED UTILITIES.

- PROPOSED SPOT GRADES AT TOP OF CURB
- PROPOSED SPOT GRADES AT PAVING OR CONCRETE
- SLOPE OF ASPHALT/CONCRETE
- EXISTING CONTOUR GRADES
- EXISTING SPOT GRADES
- SANITARY SEWER LEAD INVERTS

NORTH

GRADING PLAN PLAN

SCALE: 1"=20'-0"

0 20' 40' 60'

Scale 1"=20'

Know what's below. Calbefore you dig.

REVISIONS

CREEKWOOD ARCHITECTURE, INC.
1111 s. creekwood burton, michigan 48509
tel. (810) 742-0480 fax (810) 742-8393

SHEET TITLE GRADING PLAN

PROJECT NEW OFFICE BUILDING for WALKER JUNE CALHOUN CPA's
CREEKWOOD TRAIL BURTON - MI.
DRAWN BY B.A.C. CHECKED BY R.A.S.

JOB NO. 150001-OF

DATE 12 OCT 2015

SHEET NO. S2 OF 5

Attachment: 16-07 (2118 : SPR #16-07)

SYSTEM CAPACITY
36" DIA. = 3195 CF/FT
9 RUNS AT 390 + (2x62 FT HEADERS)

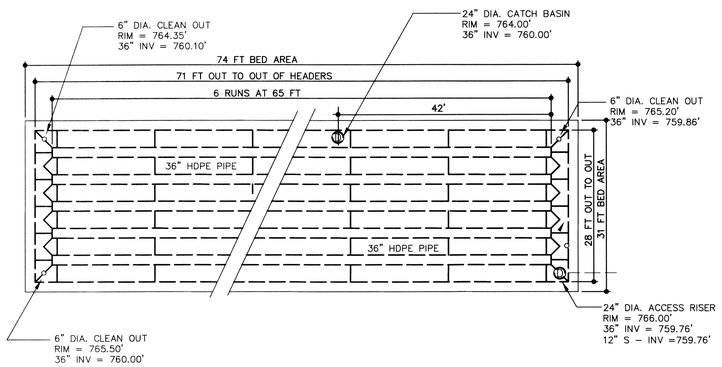

INSTALL SYSTEM PER ASTM D2321 CLASS I OR II MATERIAL-COMPACT TO 95% MODIFIED PROCTOR IN 8" LIFTS

SEE INSTALLATION NOTE ON PAGE 2

36" HDPE SOLID UNDERGROUND DETENTION SYSTEM
NO SCALE

DESIGN BY: AG / RK	DATE: 4-11-12	1 OF 3	KSI
MANUF. APPROVAL BY: .	SCALE: NTS	SHEET NO.	
DRAWING NO.			

KENNEDY SOLUTIONS, INC.
2111 Sage Lake Road
Prescott, MI 48756
Ph: 800-699-4046
Fx: 248-375-8144

TYPICAL ACCESS RISER SECTION

24" DIA. ACCESS MANHOLE IN HDPE ELBOW

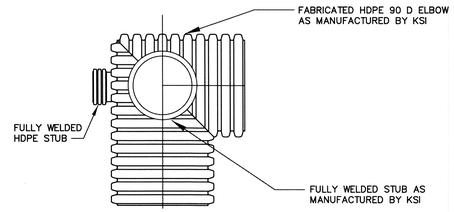

PLAN VIEW

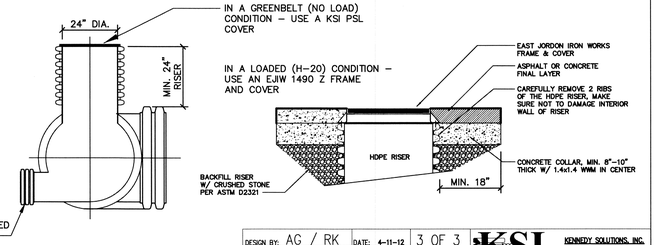

CROSS SECTION

DESIGN BY: AG / RK	DATE: 4-11-12	3 OF 3	KSI
MANUF. APPROVAL BY: .	SCALE: NTS	SHEET NO.	
DRAWING NO. ACCESS RISER			

KENNEDY SOLUTIONS, INC.
2111 Sage Lake Road
Prescott, MI 48756
Ph: 800-699-4046
Fx: 248-375-8144

NOTES:

1. FOUNDATION: WHERE THE TRENCH BOTTOM IS UNSTABLE, THE CONTRACTOR SHALL EXCAVATE TO A DEPTH REQUIRED BY THE ENGINEER AND REPLACE WITH A FOUNDATION OF CLASS I, II OR III MATERIAL AS DEFINED IN ASTM D2321, LATEST EDITION; AS AN ALTERNATIVE TRENCH BOTTOM MAY BE STABILIZED USING A WOVEN GEOTEXTILE FABRIC.

2. BEDDING: SUITABLE MATERIAL SHALL BE CLASS I, II OR III AND INSTALLED AS REQUIRED IN ASTM D2321, LATEST EDITION.

UNLESS OTHERWISE SPECIFIED BY THE ENGINEER, MINIMUM BEDDING THICKNESS SHALL BE 4" FOR 4"-24" DIA. PIPE AND 6" FOR 30"-60" DIA. PIPE.

3. HAUNCHING AND INITIAL BACKFILL: SUITABLE MATERIAL SHALL BE CLASS I, II OR III AND INSTALLED AS REQUIRED IN ASTM D2321, LATEST EDITION.

4. UNLESS OTHERWISE SPECIFIED BY THE ENGINEER, MIN. TRENCH WIDTHS ARE AS FOLLOWS

NOMINAL DIA.	MINIMUM RECOMM. TRENCH WIDTH
4"	21"
6"	23"
8"	25"
10"	28"
12"	31"
15"	34"
18"	39"
24"	48"
30"	66"
36"	78"
42"	83"
48"	89"
60"	102"

5. MINIMUM COVER: MINIMUM RECOMMENDED COVER FOR VARIOUS LIVE LOADING CONDITIONS ARE AS SUMMARIZED IN THE FOLLOWING TABLE. UNLESS OTHERWIESE NOTED, ALL DIMENSIONS ARE TAKEN FROM THE TOP OF THE PIPE TO THE GROUND SURFACE.

SURFACE LIVE LOAD	MIN. RECOMMENDED COVER
H25 (FLEXIBLE PAVEMENT)	12" FOR UP TO 48" DIA. , 24" FOR 60" DIA.*
H25 (RIGID PAVEMENT)	12" FOR UP TO 48" DIA., 24" FOR 60" DIA.
E80 RAILWAY	24"
HEAVY CONSTRUCTION	48"

*TOP OF PIPE TO BOTTOM OF BITUMINOUS PAVEMENT SECTION

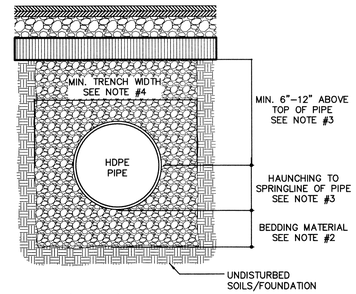

HDPE (SLCPP) STORM SEWER TRENCH DETAIL
SCALE: NONE

NOTE TO THE ENGINEER:
WHEN THIS DETAIL IS TO BE INCORPORATED INTO THE CONTRACT DOCUMENTS, PLEASE REFERENCE SECTION X-2, "RECOMMENDATIONS FOR INCORPORATION INTO CONTRACT DOCUMENTS" OF ASTM D2321, "STANDARD PRACTICE FOR UNDERGROUND INSTALLATION OF THERMOPLASTIC PIPE FOR SEWERS AND OTHER GRAVITY-FLOW APPLICATIONS" SO THAT APPROPRIATE MODIFICATIONS CAN BE MADE TO ACCOMMODATE SITE SPECIFIC CONDITIONS.

DESIGN BY: AG / RK	DATE: 12-4-06	1 OF 1	KSI
MANUF. APPROVAL BY: .	SCALE: NTS	SHEET NO.	
DRAWING NO. PIPE INSTALLATION DETAIL			

KENNEDY SOLUTIONS, INC.
2111 Sage Lake Road
Prescott, MI 48756
Ph: 800-699-4046
Fx: 248-375-8144

INSTALLATION NOTE:
HDPE UNDERGROUND DETENTION SYSTEM SHALL BE INSTALLED IN ACCORDANCE WITH ASTM D2321. CARE SHOULD BE EXERCISED WITH CONSTRUCTION EQUIPMENT DURING INSTALLATION TO PROTECT THE SYSTEM FROM DAMAGE DUE TO POINT AND IMPACT LOADING. USE A LARGE EXCAVATOR TO PLACE STONE BETWEEN AND ABOVE THE PIPE IS PREFERRABLE. COMPACTION OF THE 21AA STONE IN 6 INCH LIFTS TO 4 INCHES ABOVE PIPE. USE A VIBRATORY COMPACTOR, NOT A HOE PACK. AT 4 INCHES ABOVE PIPE, PLACE ONE LAYER EXTEND 5 FT BEYOND EXCAVATED AREA WITH GEOGRID. PLACE THE REMAINING STONE (APPROX.) OF 21AA STONE USING A TRACKED PIECE OF EQUIPMENT (DOZER) OR CONTINUE USING THE LARGE EQUIP. DESCRIBED ABOVE. DO NOT USE RUBBER TIRED EQUIP.
ONCE THE SYSTEM IS INSTALLED, PLACE A ORANGE SAFETY FENCE 4-5 FT HIGH W/ TEE POST, AROUND THE SYSTEM. PLACE FENCE 5 FT BEYOND GRID FOOTPRINT. ANY DAMAGE TO THE SYSTEM AS A RESULT OF NOT FOLLOWING THESE INSTRUCTIONS AND THE BLUEPRINT DETAILS, SHALL BE THE RESPONSIBILITY OF THE CONTRACTOR TO REPAIR THE SYSTEM TO KSI'S SATISFACTION. IF GIVEN IN WIRITING, A 3-4 DAY LEAD TIME, KSI WILL HAVE A REPRESENTATIVE AVAILABLE ON SITE DURING THE INSTALLATION.

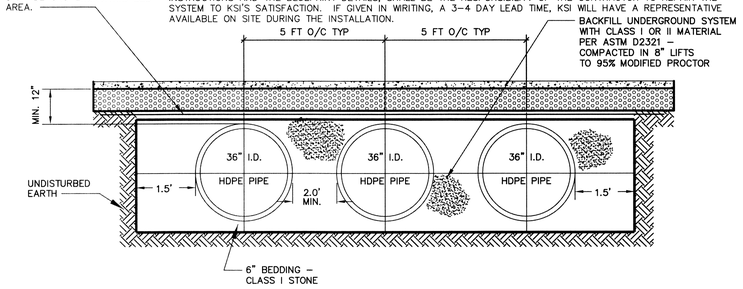

NOTES:
1. HDPE PIPE & FITTINGS SHALL CONFORM TO AASHTO M-294, TYPE S, LATEST EDITION
2. INSTALL UNDERGROUND DETENTION SYSTEM IN ACCORDANCE WITH ASTM D 2321, "STANDARD PRACTICE FOR UNDERGROUND INSTALLATION OF THERMOPLASTIC PIPE OR SEWER AND OTHER GRAVITY FLOW APPLICATIONS"
3. MEASURES SHALL BE TAKEN TO PREVENT MIGRATION OF NATIVE FINES INTO BACKFILL MATERIAL.

TYPICAL CROSS SECTION FOR 48" HDPE SOLID UNDERGROUND DETENTION SYSTEM
NO SCALE

DESIGN BY: AG / RK	DATE:	2 OF 3	KSI
MANUF. APPROVAL BY: .	SCALE: NTS	SHEET NO.	

KENNEDY SOLUTIONS, INC.
2111 Sage Lake Road
Prescott, MI 48756
Ph: 800-699-4046
Fx: 248-375-8144

REVISIONS

CREEKWOOD ARCHITECTURE, INC.
1111 s. creekwood burton, michigan 48509
tel. (810) 742-0480 fax (810) 742-8393

SHEET TITLE
STORM DETAILS

PROJECT
NEW OFFICE BUILDING for
WALKER JUNE CALHOUN CPA's
CREEKWOOD TRAIL BURTON, MI.
DRAWN BY B.A.C. CHECKED BY R.A.S.

JOB NO. 150001-OF
DATE 12 OCT 2015
SHEET NO.
S3
OF 3

Attachment: 16-07 (2118 : SPR #16-07)

10 STANDARD NOTES FOR PRELIMINARY PLATS AND SITE PLANS

1. EXTENSION OF PUBLIC UTILITIES: All public sanitary sewer and/or watermain SHALL be extended to the furthest limits of the property, including corner lots, with the pipe size and material approved by GCDC-WWS. This is necessary for plan approval. For water service of 1" or less or a building on a corner lot, the requirements to extend the public watermain and/or sanitary sewer along both property lines will be reviewed. Final determination shall be made by GCDC-WWS.
2. WATERMAIN LOOPING: All public watermains shall be looped whenever possible. The pipe sizing shall be approved by GCDC-WWS.
3. INDUSTRIAL PRETREATMENT PROGRAM(IPP): This permit is for all commercial and industrial discharges. The OWNER shall obtain an Industrial Pretretment Discharge Permit prior to the issuance of a Sewer Connection Permit. Industrial Discharge Permits are non-transferable. Changes in facility use will require a new Industrial Discharge Permit.
4. SOIL EROSION: The DEVELOPER shall submit a detailed Soil Erosion and Sedimentation Control plan and obtain an Act 451 part 91, Soil Erosion and Sedimentation Control permit. This includes the payment of fees and the providing of necessary bonds. No earth changes or excavation shall be started prior to the issuance of this permit. The DEVELOPER shall protect all existing and proposed storm sewer facilities on and adjacent to the site during excavation and construction. All sediment shall be contained on site. Any silt in county drains, storm sewer, culverts, etc. as a result of this project, shall be removed by the DEVELOPER at the cost of the DEVELOPER.
5. FLOOD PLAIN OR WETLAND CONSTRUCTION: The DEVELOPER shall apply to the Michigan Department of Environmental Quality for a permit for the alteration and/or occupation of a flood plain or floodway, as required under PA 451. Evidence of this permit may be required prior to plan approval by GCDC-WWS.
6. NPDES STORM WATER DISCHARGE PERMIT: The owner of the property shall obtain a NPDES Storm Water Discharge permit for construction activities from MDEQ as required under Public Act 451. The notice of coverage form shall be submitted through GCDC-WWS with the Soil Erosion Control permit application. All MDEQ fees shall accompany the Notice of Coverage. Evidence of this permit may be required prior to plan approval by GCDC-WWS.
7. GENESEE COUNTY PERMIT TO CONSTRUCT A PUBLIC UTILITY: After the approval of this preliminary plat or site plan, the DEVELOPER shall submit a detailed plan for construction of all public sanitary sewer and watermain. The plans must have GCDC-WWS approval, an S-permit issued, and approval from the MDEQ prior to beginning construction.
8. GENESEE COUNTY ROAD COMMISSION PERMIT: The DEVELOPER shall obtain a permit from the Genesee County Road Commission to perform work within the Genesee County Road Commission Right-of-Way. All fees for the permit, bonds and insurances are the responsibility of the developer.
9. MUNICIPALITY SANITARY SEWER AND WATER PERMIT: Prior to the issuance of a building permit by the local municipality, the developer shall be required to obtain a sanitary sewer and/or water tap-in permit from the local municipality, if authorized, or GCDC-WWS.
10. STATE CONSTRUCTION PERMITS: The sanitary sewer and watermain construction permit application from the Michigan Department of Environmental Quality (MDEQ) shall be submitted to the MDEQ after receiving approval from GCDC-WWS. Construction shall not begin until these state permits are issued.

INDICATES APPLICABILITY OF A SPECIFIC CONTROL MEASURE TO ONE OR MORE OF THE SEVEN PROBLEM AREAS.

KEY	DETAIL	CHARACTERISTICS	A (SLOPES)	B (STREAMS AND WATERWAYS)	C (SURFACE DRAINAGEWAYS)	D (ENCLOSED DRAINAGE (INLET AND OUTLET CONTROL))	E (LARGE FLAT SURFACE AREAS)	F (BORROW AND STOCKPILE AREAS)	G (ADJECENT PROPERTIES)
7	Hydro-seeding	EFFECTIVE ON LARGE AREAS. MULCH TACKING AGENT USED TO PROVIDE IMMEDIATE PROTECTION UNTIL GRASS IS ROOTED. SHOULD INCLUDE PREPARED TOPSOIL BED.	*				*	*	*
15	Paving	PROTECTS AREAS WHICH CANNOT OTHERWISE BE PROTECTED, BUT INCREASES RUNOFF VOLUME AND VELOCITY. IRREGULAR SURFACE WILL HELP SLOW VELOCITY	*				*		
16	Curb & Gutter	KEEPS HIGH VELOCITY RUNOFF IN PAVED AREAS FROM LEAVING PAVED SURFACE. COLLECTS AND CONDUCTS RUNOFF TO ENCLOSED DRAINAGE SYSTEM OR PREPARED DRAINAGEWAY.					*		*
35	Storm Sewer	SYSTEM REMOVES COLLECTED RUNOFF FROM SITE, PARTICULARLY FROM PAVED AREAS. CAN ACCEPT LARGE CONCENTRATIONS OF RUNOFF. CONDUCTS RUNOFF TO MUNICIPAL SEWER SYSTEMS OR STABILIZED OUTFALL LOCATION. USE CATCH BASINS TO COLLECT SEDIMENT.					*		*
36	Catch Basin, Drain Inlet	COLLECTS HIGH VELOCITY CONCENTRATED RUNOFF MAY USE FILTER CLOTH OVER INLET					*		*
54		USES GEOTEXTILE FABRIC AND POST OR POLES EASY TO CONSTRUCT AND LOCATE AS NECESSARY	*		*		*		*

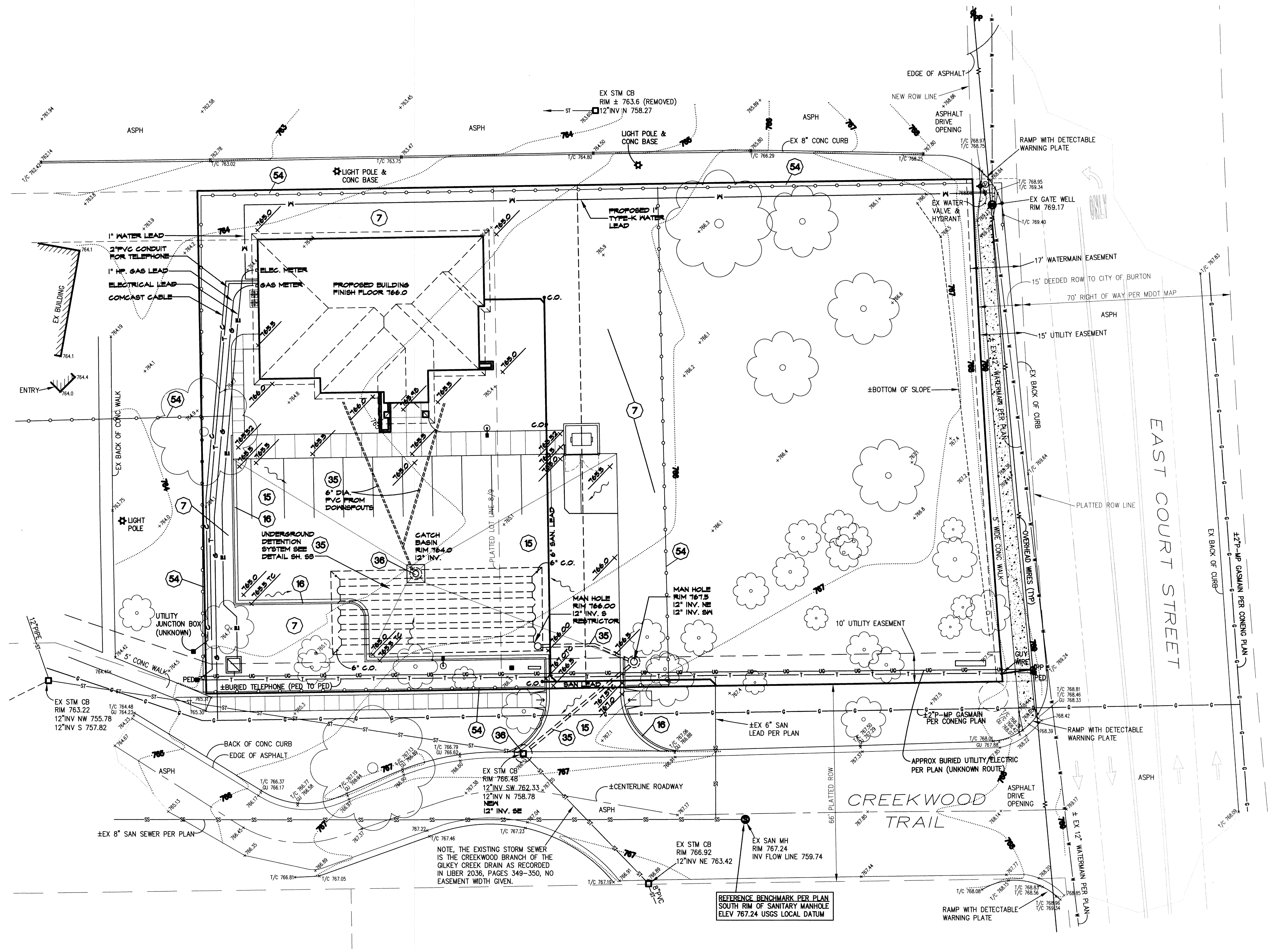

GENESEE COUNTY DRAIN COMMISSIONER
STANDARD NOTES FOR PRELIMINARY PLATS & SITE PLANS

To obtain preliminary plat or site plan approval from the office of the Genesee County Drain Commissioner, the following seven (7) notes, or some adaptation thereof, must be shown on all preliminary plats or site plant. All site plans shall have written approval of the Genesee County Drain Commissioner regarding sanitary sewers, water supply and soil erosion control prior to review by the local municipalities planning board. Where the notes are not applicable use the number and heading and state why not used.

1. SOIL EROSION CONTROL **.53 ACRES.**

   The developer shall submit a detailed erosion control plan and obtain an Act 347 soil erosion and sediment control permit, including the payment of fees and the providing of necessary bonds. No earth changes or excavation shall be started prior to the issuance of this permit. Contact 1-810-732-7870 for details.

   The developer shall protect all existing and proposed storm sewer facilities on and adjacent to the site during excavation and construction All sediment shall be contained on site. Any silt in county drains as a result of this project shall be removed by the developer.

2. FLOOD PLAIN OR WETLAND CONSTRUCTION – **(NO WORK IN WETLANDS OR FLOOD PLAIN ON THIS SITE)**

   The developer shall apply to the Michigan Department of Natural Resources for a permit for the alteration and/or occupation of a flood plain, floodway or wetland as required under PA 245.

3. NPDES STORM WATER DISCHARGE PERMIT **(LESS THAN 5 ACRES EXPOSED)**

4. GENESEE COUNTY PERMIT TO CONSTRUCT PUBLIC UTILITY

   After the approval of this preliminary plat or site plan, the developer shall submit a detailed plan for construction of all public sanitary sewer and watermain. The plans must have county approval and a S-permit issued prior to any construction.

5. GENESEE COUNTY ROAD COMMISSION PERMIT AND/OR M.D.O.T. PERMIT REQUIRED FOR WORK WITHIN **CREEKWOOD TRAIL, BURTON., MI.**

   The developer shall obtain a Genesee County Road Commission permit for any work performed within the county road right-of-way. This includes permit application, posting bonds and insurance.

6. MUNICIPALITY SANITARY SEWER & WATER PERMIT **(OBTAIN SANITARY SEWER AND WATER TAP IN PERMITS)**

   Prior to the issuance of a building permit by the local municipality the developer shall be required to obtain a sanitary sewer and/or water tap-in permit from the **GRAND BLANC TWP.** County Drain Commissioner Division of Water & Waste Services if WWS is the designated permit writer.

7. STATE CONSTRUCTION PERMITS **NOT REQUIRED FOR THIS PROJECT**

LEGEND

- FOUND IRON
- SET IRON
- FOUND MONUMENT
- SET MONUMENT
- (R) RECORDED
- (M) MEASURED
- (C) CALCULATED
- SECTION CORNER

EXISTING

- ST — STORM SEWER & MANHOLE
- SS — SANITARY SEWER & MANHOLE
- W — WATERMAIN, HYDRANT, & GATE VALVE
- G — GAS MAIN & VALVE
- T — BURIED TELEPHONE (MISS DIG MARKERS =)
- E — UNDER GROUND ELECTRIC (MISS DIG MARKERS =)
- OVERHEAD ELECTRIC, POLE, & GUY WIRE
- CATCH BASIN (CURB & ROUND)
- 765 CONTOUR LINE
- FENCE
- WELL
- LIGHT POLE
- POST
- SIGN
- STREET SIGN
- MAILBOX
- CONCRETE
- ASPHALT
- TREES

TC000.0 — PROPOSED SPOT GRADES AT TOP OF CURB	SLOPE OF ASPHALT/CONCRETE
000.0 — PROPOSED SPOT GRADES AT PAVING OR CONCRETE	000.0 EXISTING CONTOUR GRADES
	+000.0 EXISTING SPOT GRADES
	000 INV. SANITARY SEWER LEAD INVERTS

SOIL & EROSION CONTROL PLAN

NORTH

SCALE: 1"=20'-0"

0 20' 40' 60'
Scale 1"=20'

UTILITY WARNING

UNDERGROUND UTILITY LOCATIONS AS SHOWN ON THE PLANS WERE OBTAINED FROM UTILITY OWNERS, AND WERE NOT FIELD LOCATED. A MINIMUM OF THREE (3) WORKING DAYS PRIOR TO BEGINNING CONSTRUCTION, THE CONTRACTOR SHALL NOTIFY "MISS DIG" (1-800-482-7171) AND HAVE ALL UNDERGROUND UTILITIES STAKED BEFORE ANY WORK MAY BEGIN. THE CONTRACTOR SHALL BE RESPONSIBLE FOR THE PROTECTION AND/OR RELOCATION OF ALL UTILITIES THAT MAY INTERFERE WITH CONSTRUCTION. THREE (3) WORKING DAYS BEFORE YOU DIG - CALL MISS DIG (1-800-482-7171).

UTILITY INFORMATION, AS SHOWN, INDICATES APPROXIMATE LOCATIONS AND TYPES OF FACILITIES ONLY, AS DISCLOSED TO THIS FIRM BY THE VARIOUS UTILITY COMPANY'S RECORDS. NO GUARANTEE IS EXPRESSED OR IMPLIED AS TO THE COMPLETENESS OR ACCURACY THEREOF.

PRIOR TO CONSTRUCTION, ALL LOCATION AND DEPTHS OF EXISTING OVERHEAD AND UNDERGROUND UTILITIES (IN CONFLICT WITH THE CONSTRUCTION OF PROPOSED IMPROVEMENTS) SHALL BE VERIFIED IN FIELD. DURING CONSTRUCTION, CONTRACTOR SHALL USE EXTREME CAUTION WHEN OPERATING NEAR OVERHEAD AND/OR BURIED UTILITIES.

811
Know what's below. Call before you dig.

REVISIONS

CREEKWOOD ARCHITECTURE, INC.
1111 s. creekwood burton, michigan 48509
tel. (810) 742-0480 fax (810) 742-8393

SHEET TITLE: SOIL & EROSION CONTROL PLAN

PROJECT: NEW OFFICE BUILDING for WALKER JUNE CALHOUN CPA's
CREEKWOOD TRAIL BURTON, MI.

DRAWN BY B.A.C. CHECKED BY R.A.S.

JOB NO. 150001-OF
DATE 12 OCT 2015
SHEET NO. S4 OF 5

Attachment: 16-07 (2118 : SPR #16-07)

MICHIGAN UNIFIED KEYING SYSTEM

✱ INDICATES APPLICABILITY OF A SPECIFIC CONTROL MEASURE TO ONE OR MORE OF THE SEVEN PROBLEM AREAS

KEY	DETAIL	CHARACTERISTICS	A SLOPES	B STREAMS AND WATERWAYS	C SURFACE DRAINAGEWAYS	D ENCLOSED DRAINAGE (Inlets & outlet control)	E LARGE FLAT SURFACE AREAS	F BORROW AND STOCKPILE AREAS	G ADJACENT PROPERTIES
1	Stripping & Stockpiling Topsoil	TOPSOIL MAY BE STOCKPILED ABOVE BORROW AREAS TO ACT AS A DIVERSION. STOCKPILE SHOULD BE TEMPORARILY SEEDED.	✱				✱	✱	
2	Selective Grading & Shaping	WATER CAN BE DIVERTED TO MINIMIZE EROSION. FLATTER SLOPES EASE EROSION PROBLEMS.	✱				✱	✱	✱
3	Grubbing Omitted	SAVES COST OF GRUBBING, PROVIDES NEW SPROUTS RETAINS EXISTING ROOT MAT SYSTEM, REDUCES WIND FALL AT NEW FOREST EDGE. DISCOURAGES EQUIPMENT ENTRANCE.	✱				✱		✱
4	Vegetative Stabilization	MAY UTILIZE A VARIETY OF PLANT MATERIAL STABILIZES SOIL. SLOWS RUNOFF VELOCITY. FILTERS SEDIMENT FROM RUNOFF	✱	✱	✱		✱	✱	✱
5	Seeding	INEXPENSIVE AND VERY EFFECTIVE. STABILIZES SOIL, THIS MINIMIZES EROSION. PERMITS RUNOFF TO INFILTRATE SOIL, REDUCING RUNOFF VOLUME. SHOULD INCLUDE PREPARED TOPSOIL BED.	✱		✱		✱	✱	✱
6	Seeding with Mulch and/or Matting	FACILITATES ESTABLISHMENT OF VEGETATIVE COVER EFFECTIVE FOR DRAINAGEWAYS WITH LOW VELOCITY. EASILY PLACED IN SMALL QUANTITIES BY INEXPERIENCED PERSONNEL. SHOULD INCLUDE PREPARED TOPSOIL BED	✱		✱			✱	✱
7	Hydro-seeding	EFFECTIVE ON LARGE AREAS. MULCH TACKING AGENT USED TO PROVIDE IMMEDIATE PROTECTION UNTIL GRASS IS ROOTED. SHOULD INCLUDE PREPARED TOPSOIL BED.	✱				✱	✱	✱
8	Sodding	PROVIDES IMMEDIATE PROTECTION. CAN BE USED ON STEEP SLOPES WHERE SEED MAY BE DIFFICULT TO ESTABLISH. EASY TO PLACE; MAY BE REPAIRED IF DAMAGED. SHOULD INCLUDE PREPARED TOPSOIL BED.	✱		✱		✱	✱	✱
9	Vegetative Buffer Strip	SLOWS RUNOFF VELOCITY. FILTERS SEDIMENT FROM RUNOFF. REDUCES VOLUME OF RUNOFF ON SLOPES	✱	✱					✱
10	Mulching	USED ALONE TO PROTECT EXPOSED AREAS FOR SHORT PERIODS. PROTECTS SOIL FROM IMPACT OF FALLING RAIN. PRESERVES SOIL MOISTURE AND PROTECTS GERMINATING SEED FROM TEMPERATURE EXTREMES	✱				✱	✱	
11	Roughened Surface	REDUCES VELOCITY AND INCREASES INFILTRATION RATES COLLECTS SEDIMENT. HOLDS WATER, SEED, AND MULCH BETTER THAN SMOOTH SURFACES.	✱				✱		
12	Compaction	HELPS HOLD SOIL IN PLACE, MAKING EXPOSED AREAS LESS VULNERABLE TO EROSION	✱				✱		
13	Riprap, Rubble, Gabions	USED WHERE VEGETATION IS NOT EASILY ESTABLISHED EFFECTIVE FOR HIGH VELOCITIES OF HIGH CONCENTRATIONS PERMITS RUNOFF TO INFILTRATE SOIL. DISSIPATES ENERGY FLOW AT SYSTEM OUTLETS	✱	✱	✱				
14	Aggregate Cover	STABILIZES SOIL SURFACE THUS MINIMIZING EROSION PERMITS CONSTRUCTION TRAFFIC IN ADVERSE WEATHER MAY BE USED AS PART OF PERMANENT BASE CONSTRUCTION OF PAVE AREAS.					✱		
15	Paving	PROTECTS AREAS WHICH CANNOT OTHERWISE BE PROTECTED, BUT INCREASES RUNOFF VOLUME AND VELOCITY. IRREGULAR SURFACE FILL HELP SLOW VELOCITY	✱				✱		
16	Curb & Gutter	KEEPS HIGH VELOCITY RUNOFF IN PAVED AREAS FROM LEAVING PAVED SURFACE. COLLECTS AND CONDUCTS RUNOFF TO ENCLOSED DRAINAGE SYSTEM OR PREPARED DRAINAGEWAY.					✱		✱
17	Benches	REDUCES RUNOFF VELOCITY BY REDUCING EFFECTIVE SLOPE LENGTH. COLLECTS SEDIMENT. PROVIDES ACCESS TO SLOPE FOR SEEDING, MULCHING AND MAINTENANCE.	✱					✱	
18	Diversion Berm	DIVERTS WATER FROM VULNERABLE AREAS COLLECTS AND DIRECTS WATER TO PREPARED DRAINAGEWAYS MAY BE PLACED AS PART OF NORMAL CONSTRUCTION OPERATION	✱					✱	✱
19	Diversion Ditch	COLLECTS AND DIVERTS WATER TO REDUCE EROSION POTENTIAL. MAY BE INCORPORATED IN PERMANENT PROJECT DRAINAGE SYSTEMS	✱					✱	✱
20	Berm & Ditch	DIVERTS WATER TO A PREPARED DRAINAGEWAY. MAY BE USED AT INTERVALS ACROSS SLOPE FACE TO REDUCE EFFECTIVE SLOPE LENGTH.	✱					✱	✱
21	Filter Berm	CONSTRUCTED OF GRAVEL OR STONE INTERCEPTS AND DIVERTS RUNOFF TO STABILIZED AREAS OR PREPARED DRAINAGE SYSTEMS. SLOWS RUNOFF AND COLLECTS SEDIMENT.	✱	✱					✱
22	Brush Berm	USES SLASH AND LOGS FROM CLEARING OPERATIONS CAN BE COVERED AND SEEDED RATHER THAN REMOVED ELIMINATES NEED FOR BURNING OR REMOVAL IF MATERIAL FROM SITE.							✱
23	Bare Channel	LEAST EXPENSIVE FORM OF DRAINAGEWAY MAY BE USED ONLY WHERE GRADIENT IS VERY LOW AND WITH SOILS OF MINIMUM EROSION POTENTIAL.			✱				
24	Grassed Waterway	MUCH MORE STABLE FORM OF DRAINAGEWAY THAN BARE CHANNEL. GRASS TENDS TO SLOW RUNOFF AND FILTER OUT SEDIMENT. USED WHERE BARE CHANNEL WOULD BE ERODED.			✱				
25	Slope Drain (Surface Pipe)	PREVENTS EROSION ON SLOPES WHEN RUNOFF CANNOT BE DIVERTED TO EDGES OF SLOPE AREA. USUALLY TEMPORARY. CAN BE CONSTRUCTED OR EXTENDED AS GRADING PROGRESSES.	✱						
26	Slope Drain (Paved Chute)	PREVENTS EROSION ON SLOPES WHEN RUNOFF CANNOT BE DIVERTED TO EDGE OF SLOPE AREA. USUALLY PERMANENT. CAN BE CONSTRUCTED OR EXTENDED AS GRADING PROGRESSES.	✱						
27	Slope Drain (Subsurface Pipe)	PREVENTS EROSION ON SLOPES WHEN RUNOFF CANNOT BE DIVERTED TO EDGE OF SLOPE AREA. USUALLY PERMANENT. CAN BE CONSTRUCTED AS GRADING PROGRESSES.	✱						
28	Drop Spillway	SLOWS VELOCITY OF FLOW, REDUCING EROSIVE CAPACITY.		✱	✱				
29	Pipe Drop	REDUCES RUNOFF VELOCITY REMOVES SEDIMENT AND TURBIDITY CAN BE DESIGNED TO HANDLE LARGE VOLUMES OF FLOW.			✱				
30	Pipe Spillway	REMOVES SEDIMENT AND TURBIDITY FROM RUNOFF MAY BE PART OF PERMANENT EROSION CONTROL PLAN			✱				
31	Energy Dissipater	SLOWS RUNOFF VELOCITY TO NON-EROSIVE LEVEL PERMITS SEDIMENT COLLECTION FROM RUNOFF	✱		✱	✱			
32	Level Spreader	CONVERTS COLLECTED CHANNEL OR PIPE FLOW BACK TO SHEET FLOW. AVOIDS CHANNEL EASEMENTS AND CONSTRUCTION OFF PROJECT SITE. SIMPLE TO CONSTRUCT.			✱				
33	Sediment Trap	MAY BE CONSTRUCTED OF A VARIETY OF MATERIALS TRAPS SEDIMENT AND REDUCES VELOCITY OF FLOW CAN BE CLEANED AND EXPANDED AS NEEDED		✱	✱				
34	Sediment Basin	TRAPS SEDIMENT RELEASES RUNOFF AT NON-EROSIVE RATES CONTROLS RUNOFF AT SYSTEM OUTLETS CAN BE VISUAL AMENITIES		✱	✱	✱			
35	Storm Sewer	SYSTEM REMOVES COLLECTED RUNOFF FROM SITE. PARTICULATES FROM PAVED AREAS, CAN ACCEPT LARGE QUANTITIES OF WATER. MAY BE REQUIRED BY LOCAL OR MUNICIPAL ORDINANCE. OFTEN OUTLETS OR STABILIZED OUTFALL LOCATION. USE CATCH BASINS TO COLLECT SEDIMENT.					✱		✱
36	Catch Basin, Drain Inlet	COLLECTS HIGH VELOCITY CONCENTRATED RUNOFF MAY USE FILTER CLOTH OVER INLET					✱		✱
37	Sod Filter	INEXPENSIVE AND EASY TO CONSTRUCT PROVIDES IMMEDIATE PROTECTION PROTECTS AREAS AROUND INLETS FROM EROSION				✱			
38	Straw Bale Filter	INEXPENSIVE AND EASY TO CONSTRUCT CAN BE LOCATED AS NECESSARY TO COLLECT SEDIMENT MAY BE USED IN CONJUNCTION WITH SNOW FENCE FOR ADDED STABILITY.				✱			✱
39	Rock Filter	CAN UTILIZE MATERIAL FOUND ON SITE EASY TO CONSTRUCT FILTERS SEDIMENT FROM RUNOFF				✱			✱
40	Inlet Sediment Trap	EASY TO SHAPE COLLECTS SEDIMENT MAY BE CLEANED AND EXPANDED AS NEEDED				✱			
41	Stone and Rock Crossing	MAY BE ROCK OR CLEAN RUBBLE MINIMIZES STREAM TURBIDITY INEXPENSIVE MAY ALSO SERVE AS DITCH CHECK OR SEDIMENT TRAP		✱					
42	Temporary Culvert	ELIMINATES STREAM TURBULENCE AND TURBIDITY PROVIDES UNOBSTRUCTED PASSAGE FOR FISH AND OTHER WATER LIFE. CAPACITY FOR NORMAL FLOW CAN BE PROVIDED WITH STORM WATER FLOWING OVER ROADWAY		✱					
43	Culvert Sediment Trap	EASY TO INSTALL AT INLET KEEPS CULVERT CLEAN AND FREE FLOWING MAY BE CONSTRUCTED OF LUMBER OR LOGS		✱					✱
44	Jetty	DEFLECTS CURRENTS AWAY FROM STREAM BANK AREA		✱					
45	Temporary Stream Channel Change	NEW CHANNEL KEEPS NORMAL FLOWS AWAY FROM CONSTRUCTION. REQUIRES STATE PERMIT.		✱					
46	Sheet Pilings	PROTECTS ERODIBLE BANK AREAS FROM STREAM CURRENTS DURING CONSTRUCTION. MINIMAL DISRUPTION WHEN REMOVED		✱					
47	Cofferdam	WORK CAN BE CONTINUED DURING NORMAL STREAM CONDITIONS. CLEAR WATER CAN BE PUMPED DIRECTLY BACK INTO STREAM.		✱					
48	Construction Dam	PERMITS WORK TO CONTINUE DURING NORMAL STREAM STATUS. CONTROLLED FLOODING CAN BE ACCOMPLISHED DURING PERIODS OF INACTIVITY.		✱					
49	Check Dam	REDUCES FLOW VELOCITY CATCHES SEDIMENT CAN BE CONSTRUCTED OF LOGS, STRAW, ROCK, LUMBER, MASONRY, OR SAND BAGS.		✱	✱				
50	Weir	CONTROLS SEDIMENTATION IN LARGE STREAMS CAUSES MINIMAL TURBIDITY		✱	✱				
51	Retaining Wall	REDUCES GRADIENT WHERE SLOPES ARE EXTREMELY STEEP PERMITS RETENTION OF EXISTING VEGETATION, KEEPING SITE STABLE IN CRITICAL AREAS. MINIMIZES MAINTENANCE	✱						✱
52	Seepage Control	PREVENTS PIPING AND SOIL SLIPPAGE ON CUT SLOPES	✱						✱
53	Windbreak	MINIMIZES WIND EROSION MAY BE SNOW FENCE					✱		
54		USES GEOTEXTILE FABRIC AND POST OR POLES EASY TO CONSTRUCT AND LOCATE AS NECESSARY	✱		✱		✱		✱

SOIL EROSION & SEDIMENTATION CONTROL

1. Developer/property owner shall submit a detailed erosion control plan and obtain a Soil Erosion & Sedimentation Control Permit prior to any earth changes.
2. Construction operations shall be scheduled and performed so that preventative erosion control measures are in place prior to excavation and temporary stabilization measures are in place immediately following backfilling and/or grading operations.
3. Borrow and fill disposal areas will be selected and approved at time of plan review.
4. Special precautions will be taken in the use of construction equipment to prevent situations that promote erosion.
5. Cleanup will be done in a manner to insure that erosion control measures are not disturbed.
6. The project will continually be inspected for soil erosion and sediment control compliance. Deficiencies will be corrected by the developer within 24 hours.
7. Temporary erosion control measures shall be completely removed by the developer upon establishment of permanent control measures.

CONSTRUCTION SEQUENCE

1. Excavation and stockpiling of soil.
2. Implementation of temporary erosion control measures; selective grading, diversions as required in field, protection of storm sewer facilities.
3. Periodic maintenance of affected erosion control measures.
4. Permanent measures; final grading, seeding and mulching.

SEE UNIFIED KEYING SYSTEM FOR EROSION CONTROL KEY NUMBERS

DNR STREAM CROSSING NOTES

Construction of stream crossing shall be subject to the specifications for protection of natural resources at utility crossing as given in the Administration Rules for Act 346 (rules 24 through 29).

A siltation barrier shall be constructed immediately downstream of the construction site prior to the commencement of any construction activities. (See Michigan Unified Keying System for specified barrier) The siltation barrier shall be maintained in good working order throughout the duration of the project.

Backfill shall consist of inert materials which will not cause siltation nor contain soluble chemicals or organic matter which is biodegradable. All fill shall be contained in such a manner so as not to erode into any watercourse.

All row banks shall be stabilized with riprap to three feet above the ordinary high water water mark, then seeded, fertilized and mulched, or sodded to prevent erosion.

Upon project completion the excess spoils shall be removed and disposed of in an approved upland site.

Siltation barrier may be removed upon placement of permanent erosion control measures.

DEMOLITION

1. All demolition work shall conform to all local codes and ordinances. All demolition operations shall comply with MIOSHA regulations insofar as they apply to the required work. A Soil Erosion Control Plan will be required prior to demolition.
2. The contractor shall remove and clear all trees, brush, fences, buildings, curb, and asphalt as shown on the plans or as directed by the Engineer.
3. All demolition material shall be properly removed from the site and disposed of in a legally designated disposal area. No on-site burning will be permitted. Permits and fees for disposal of demolition material shall be obtained and paid for by the contractor.
4. The contractor shall demolish and remove any items remaining from the existing building in its entirety including walls, foundations and footings. All buildings drains and utility leads shall be located and plugged. Utility lead work shall be coordinated with the appropriate utility companies.
5. Backfill excavated areas with clean granular fill compacted to 95% density in 9" lifts.
6. The contractor shall cut and seal the existing sanitary lead at the property line and shall disconnect the existing water service lead at the curbline shut-off valve on the house side of the valve. Notify GCDC-WWS (810-732-7870) prior to beginning this work.
7. At the conclusion of the demolition operations, the entire work area shall be left in a clean condition with any protective devices and barriers removed. All exposed areas shall be suitably topsoiled, seeded and mulched.

NOTES TO CONSULTANTS

1. Item #1 – A detailed soil erosion control plan and permit is required for all projects that are within 500 ft. of any water course, or a project that disturbs one (1) acre or more of area. (See Matthew Roysin 810-732-7870)
2. Item #3 – A NPDES Stormwater or discharge permit is required for all construction activity that disturbs 5 acres or more of land. The fee for this State permit is currently set @ $125.00. The permits are processed thru the District office of NDNR @ Morrice.
3. Item #6 – The Engineer shall determine from John Murphy (810-732-7870) whether WWS or the municipality writes the top-in permits and this note shall be modified accordingly.

NOTES

The following notes are to be used as applicable when submitting plans for review by the Genesee County Drain Commissioner. Use only those applicable and adapt them to your project. See note explanation to consult at end of this segment.

1. Sanitary sewer saddle taps shall be made by Genesee County Division WWS personnel. The developer shall obtain the required municipality sanitary sewer permit or the S construction permit and pay the Division of WWS the required fee for a saddle tap.
2. Sanitary sewer service lead from the public main line to the property line shall be a 6" VCP or PVC pipe with a SDR of 26 or lower. There shall be a separate lead for each individual
3. Sanitary mainline and service leads shall be encased in crushed limestone in accordance with GCDC-WWS detail.
4. Water service connection and curb box shall be installed in accordance with Genesee County Standard Detail by the developer.
5. All water service leads shall be "K" copper. Each unit shall have an individual lead.
6. All watermain pressure taps 4" and larger shall be constructed with cast iron tapping sleeves and within a manhole structure per GCDC standard details.
7. For commercial sites the developer shall obtain and industrial pre-treatment permit or a waiver from GCDC-WWS. Contact J. Best @ 810-232-7662.
8. The site excavation contractor shall verify the sanitary sewer depth and be responsible for providing adequate slope of building sewer toward the mainline sewer in strict accordance with the governing authorities.
9. All existing utilities serving the property shall be properly terminated in compliance with city and/or county regulations. Remove all trees, including root structures, except those specifically noted to remain and those on property lines. Do not clear site prior to coordinating with the owner and the landscaping plan to determine all trees to remain.
10. Demolish and remove all existing structures, trees, fences, slabs, driveways and sidewalks. Visit site to determine extent of demolition work which may or may not be shown on plans. (See demolition notes.)
11. Verify exact location of underground utilities prior to beginning construction.
12. Contractor is to adjust any utility element meant to be flush with grade (clean out, valve boxes, manholes, catch basins, inlets, etc.) that is affected by site work or grade changes, whether specifically noted on plans or not.
13. The water supply for all commercial and industrial buildings shall be equipped with backflow prevention devices in accordance with BOCA codes. An approval of methods must be acquired fro the utility company.
14. All on site water services shall meet the requirements of standard detail 8W of GCDC-WWS.
15. The contractor shall notify MISS DIG (1-800-482-7171) three (3) working days prior to starting any excavation with power equipment.
16. The contractor/developer shall pay for and obtain all building permits, local permits and pay all charges for inspections and tests.

NOTES TO CONSULTANTS

1. Where a public sanitary sewers or watermains are developed to serve a project the utility shall be extended to the limits of the property.
2. For item #2, the current rate for a saddle tap by GCDC-WWS is $100.00.
3. For item #3, commercial buildings shall use a 6" sanitary lead from the main to be structure. Lead shall connect to the mainline and not at a manhole structure.
4. Item #5, specify if the water service tap is to be made by GCDC-WWS or by the developer. Lead shall connect to the mainline and not at a manhole structure.
5. All public water supply systems shall be looped when feasible. The looping may be accomplished by phased construction but the original submission should show the final looped connection.
6. For commercial establishments that generate grit or grease an external grease trap shall be provided. (Show detail on plan with appropriate notes.) The domestic sewage should be designed to bypass the grease/grit trap.
7. For domestic water service, fire protection meters, or sprinkler meter include an appropriate adaptation of SD 15W. Show the plan and include the standard detail. The location of the external shut off valve for the domestic service must be located externally for shut off purposes.
8. Note #7, minimum slope for a commercial lead so one foot of fall per 100 feet of run. Show the invert at the structure and the slope to the property line. If the mainline is deep show the bends required to drop the 6" service lead down to the public system.

TEMPORARY SEEDING GUIDE

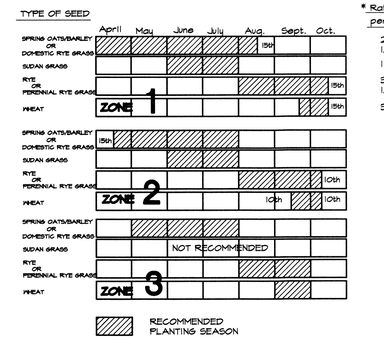

* Rate of Application per/1,000 S.F.	per acre
2 lbs.	3 bu.
1/2 lbs.	20-25 lbs.
1 lbs.	30-40 lbs.
3 lbs.	2-3 bu.
1/2 lbs.	20-25 lbs.
3 lbs.	2-3 bu.

* RATE OF APPLICATION APPLIES TO ALL ZONES

PERMANENT SEEDING GUIDE

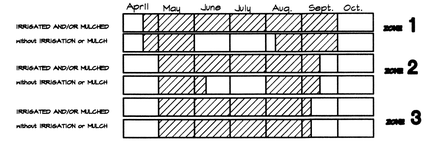

TABLE A ADAPTED SEEDING MIXTURES for various soil conditions & land uses-chose mixture number and then refer to TABLE B

SITE CONDITIONS	INTENDED USE: TO BE MOWED: LAWNS, GOLF FAIRWAYS, ECT.	TO BE MOWED: ROUGH PLAY AREAS	NO REGULAR MOWING: WILDLIFE AREAS	NO REGULAR MOWING: DITCHES & STEEP AREAS	NO REGULAR MOWING: WATERWAYS & POND AREAS
WELL-DRAINED SAND AND LOAMY SAND	SUNNY 1* SHADE 2*	4	6	7	8
WELL-DRAINED, MODERATELY COARSE TO MEDIUM TEXTURED SOIL, SANDY LOAM, LOAMS-SILT LOAM	SUNNY 1 SHADE 2	1 or 5	9,11 or 12	13 or 14	16 or 19
WELL DRAINED CLAYEY SOILS	SUNNY 1* SHADE 2*	1 or 5	9,10 or 12	13 or 14	16,17 or 19
POORLY DRAINED SOILS WITHOUT ARTIFICIAL DRAINAGE	3	3 or 5	10 or 15	13	17,18 or 19

* IRRIGATION WILL BE NEEDED
WITH ARTIFICIAL DRAINAGE USE WELL DRAINED GROUP SITE CONDITION ABOVE

TABLE B SEEDING MIXTURES* POUNDS PER ACRE AND POUNDS PER 1000 SQ. FT. (IN DECIMALS)

	1	2	3	4	5	6	7	8	9	10	11	12	13	14	15	16	17	18	19
GRASSES: CREEPING RED FESCUE	30	50	10	20			15	15				10							15
GRASSES: DOMESTIC RYE GRASS	a			a		2	5	5							5	5			
GRASSES: KENTUCKY BLUEGRASS	30	10	15									2							10
GRASSES: REDTOP												1							
GRASSES: REED CANARY GRASS													5						
GRASSES: ROUGHSTALK-BLUEGRASS			5																
GRASSES: SEASIDE BENTGRASS																	1	1	1
GRASSES: SMOOTH BROMEGRASS					5			5								5	10		
GRASSES: TALL FESCUE				25		10				Bu		30	10b				20	10	
GRASSES: TIMOTHY										5		5	2						
(C) LEGUMES: ALFALFA					6				6										
(C) LEGUMES: ALSIKE CLOVER											3								
(C) LEGUMES: BIRDSFOOT TREFOIL												5	5						
(C) LEGUMES: CROWN VETCH														Bu					
(C) LEGUMES: LADINO CLOVER											1								
(C) LEGUMES: RED CLOVER											6								
(C) LEGUMES: SWEET CLOVER												10b							

no. from table A

a FIVE POUNDS OF RYE GRASS MAY BE ADDED TO THIS MIXTURE ON ERODIBLE SITE FOR INSTANT COVER
b USE ONLY WHERE pH IS 6.5 OR HIGHER c INOCULATE LEGUMES WITH CORRECT INOCULANT
* UNDER SEED MIXTURE NUMBER SELECTED USE ALL SPECIES IN THAT COLUMN

Conversion Table

lbs/Acre	lbs/1000 SF
1	.03
2	.05
3	.08
5	.15
6	.15
8	.20
10	.25
15	.40
20	.50
25	.70
30	.75

SOIL EROSION / SEDIMENTATION CONTROL
OPERATION TIME SCHEDULE

CONSTRUCTION SEQUENCE	JAN	FEB	MAR	APR	MAY	JUNE	JULY	AUG	SEP	OCT	NOV	DEC
STRIP & STOCKPILE TOPSOIL												
ROUGH GRADE/ SEDIMENT CONTROL												
TEMP. CONTROL MEASURES												
STORM FACILITIES												
TEMP. CONSTRUCTION ROADS												
FOUNDATIONS/ BLDG. CONSTRUCTION												
SITE CONSTRUCTION												
PERM. CONTROL MEASURES												
FINISH GRADING												
LANDSCAPING												

REVISIONS

CREEKWOOD ARCHITECTURE, INC.
burton, michigan 48509
1111 s. creekwood
tel. (810) 742-0480 fax (810) 742-8393

SHEET TITLE
SOIL EROSION KEY PLAN
LEGEND & NOTES

PROJECT
NEW OFFICE BUILDING for
WALKER JUNE CALHOUN CPA's
CREEKWOOD TRAIL BURTON, MI.

DRAWN BY B.A.C. CHECKED BY R.A.S.

JOB NO. 150001-OF
DATE 12 OCT 2015
SHEET NO.
S5
OF 5

Attachment: 16-07 (2118 : SPR #16-07)

SD-1

NOTES

1. PLACE 12" OF CRUSHED LIMESTONE 22A (A2) ON THE COMPACTED SAND BACKFILL (A5) FOR ALL DRIVES, PARKING LOTS OR OTHER HARD SURFACED AREAS.

2. THE CONTRACTOR SHALL COMPACT THE SAND BACKFILL (A5) TO 95% OF THE MATERIAL UNIT WEIGHT BY MODIFIED PROCTOR ACROSS ALL ROADWAYS AND DRIVES PER THE SCHEDULE OF BACKFILLING IN THE SPECIFICATIONS. THIS INCLUDES SERVICE LEADS UNLESS BORED. THE CONTRACTOR SHALL DO THE TESTING WITH THE RESULTS SUBMITTED TO BCDC-WWS PRIOR TO FINAL TESTING.

3. WHERE THE GROUND ELEVATION AT THE TRENCH LINE IS ABOVE THE ELEVATION OF THE CENTERLINE OF THE ROAD, THE CONTRACTOR SHALL INSTALL THE PRESSURE PIPE 6' BELOW THE ELEVATION OF THE ROAD. THE EXTRA DEPTH SHALL BE NOTED ON THE AS-BUILT DRAWINGS.

4. FOR ADDITIONAL CONSIDERATION OF PIPE ZONE EMBEDMENT CONDITIONS, SEE AWWA C600-99.

5. DESIGN ENGINEER SHALL REVIEW AND ADJUST PIPE THICKNESS DESIGN RECOMMENDATIONS IN AWWA C151/A21.51-02 FOR ADDITIONAL DEPTHS OF COVER.

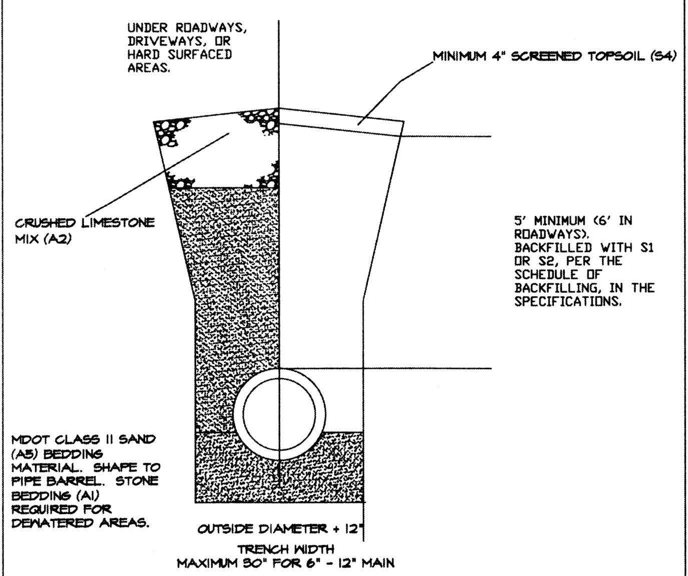

SD-1
PRESSURE PIPE BEDDING AND BACKFILL
05/01/2004 PRESSURE PIPE

SD-2

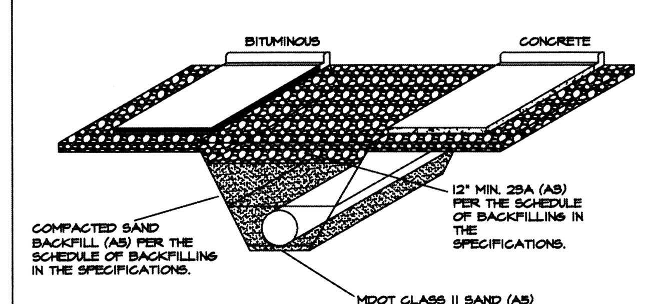

SPECIAL REQUIREMENTS FOR OPEN CUTTING HARD SURFACE AND/OR GRAVEL ROADS

1. THE CONTRACTOR SHALL ACQUIRE A SPECIAL OPEN CUT APPROVAL FROM THE AGENCY HAVING AUTHORITY OVER THE ROADWAYS.

2. THE CONTRACTOR SHALL SUPPLY CONTINGENT LIABILITY INSURANCE FOR THE AGENCY HAVING AUTHORITY OVER THE ROADWAYS.

3. THE PROTECTION OF THE WORK SHALL BE IN ACCORDANCE WITH THE "MICHIGAN MANUAL OF UNIFORM TRAFFIC CONTROL DEVICES, PART 6". BARRICADES, WARNING AND LIGHTING NECESSARY FOR PUBLIC SAFETY TO BE APPROVED BY THE ENGINEER AND THE AGENCY HAVING AUTHORITY OVER THE ROADWAYS PRIOR TO STARTING CONSTRUCTION.

4. CONTRACTOR SHALL EXCAVATE ALL MATERIAL TO PROPOSED GRADE.

5. THE WATERMAIN SHALL BE PLACED ON MDOT CLASS II SAND (A5) BEDDING.

6. ALL BACKFILL SHALL BE MDOT CLASS II SAND (A5), PLACED PER THE SCHEDULE OF BACKFILLING.

7. THE SAND BACKFILL SHALL EXTEND FROM THE OUTSIDE EDGE OF SHOULDER TO OUTSIDE EDGE OF SHOULDER, OR FOR CURB AND GUTTER SECTIONS, SHALL BE EXTENDED 5' FROM THE OUTSIDE EDGE OF THE CURB TO THE OUTSIDE EDGE OF THE GUTTER.

8. THE FINAL 12" OF ALL BACKFILL SHALL BE 22A LIMESTONE (A2) SUBBASE MODIFIED PER GCRC SPECIFICATIONS. ALL SHOULDERS SHALL BE REPAIRED PER THE AGENCY HAVING AUTHORITY OVER THE ROADWAYS.

9. THE CONTRACTOR SHALL REPLACE THE ROAD SURFACE WITH THE AGENCY HAVING AUTHORITY OVER THE ROADWAYS APPROVED MATERIAL.

10. CONTRACTOR SHALL MAINTAIN TEMPORARY ACCESS TO ALL AREAS DURING CONSTRUCTION. A PUBLIC ROAD MAY BE CLOSED FOR 1/2 WIDTH CONSTRUCTION WITH AGENCY HAVING AUTHORITY OVER THE ROADWAYS APPROVAL BUT THE CLOSING TIME CANNOT EXCEED 8 HOURS. CONTRACTOR MAY USE SHOULDERS AND TEMPORARY PATCHES TO KEEP A ROAD OPEN.

SD-2
OPEN CUTTING PERPENDICULAR TO ROAD
05/01/2004 PRESSURE PIPE

SD-3

TABLE INDICATES MINIMUM BEARING

DIA. OF PIPE OR BRANCH OF TEE	90° BEND OR SMALLER			45° BEND			22 1/2° BEND			PLUGS, HYDRANTS AND TEES		
	A	B	C	A	B	C	A	B	C	A	B	C
6"	2'-0"	2'-0"	0'-9"	2'-0"	1'-0"	0'-9"	2'-0"	1'-0"	0'-9"	2'-0"	2'-0"	1'-0"
8"	3'-0"	2'-0"	1'-0"	2'-0"	2'-0"	1'-3"	2'-0"	1'-0"	1'-0"	3'-0"	2'-0"	1'-9"
12"	4'-0"	3'-0"	1'-6"	3'-0"	3'-0"	1'-6"	2'-0"	2'-0"	1'-6"	4'-0"	3'-0"	2'-0"
16"	6'-0"	4'-0"	1'-6"	4'-0"	4'-0"	1'-6"	3'-0"	3'-0"	1'-6"	5'-0"	4'-0"	2'-0"
24"	8'-0"	6'-6"	2'-0"	5'-0"	5'-0"	2'-0"	4'-0"	4'-0"	2'-0"	8'-0"	6'-0"	2'-6"

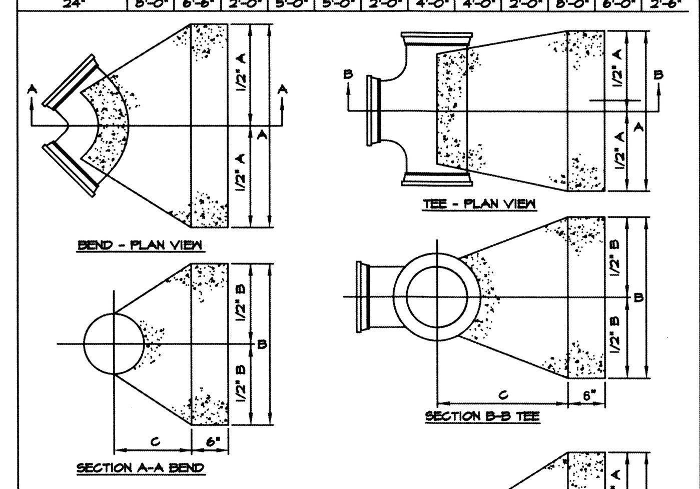

NOTES

1. CONTRACTOR SHALL USE BCDC-WWS APPROVED RESTRAINED JOINTS IN ADDITION TO THRUST BLOCKS.

2. USE 3000 PSI CONCRETE FOR ALL THRUST BLOCKS.

3. POUR AGAINST UNDISTURBED SOIL.

4. KEEP BOLTS, FITTINGS AND JOINTS CLEAR OF CONCRETE.

5. BEARING AREA IS FIGURED ON 2000-PSI SOIL CAPACITY.

SD-3
THRUST BLOCK DETAILS
05/01/2004 PRESSURE PIPE

SD-4

MINIMUM PIPE RESTRAINT SCHEDULE FOR GROUND BURIED PRESSURE PIPES [1]

LENGTH (IN FEET) OF RESTRAINT REQUIRED [2]

DEFLECTION ANGLE / PIPE	22 1/2°	33 1/4°	45°	56 1/2°	67 1/2°	78 1/4°	90° TEE OR DEAD END
6"	3	6	11	16	23	29	37
8"	4	8	13	22	31	41	50
10"	5	11	18	28	38	49	61
12"	6	13	22	33	45	59	73
14"	7	14	25	37	52	68	84
16"	8	16	28	42	59	77	93
18"	8	18	31	47	66	86	107
20"	9	20	35	53	73	93	118
24"	11	23	40	61	85	111	138
30"	13	29	50	75	105	136	170
36"	15	34	59	88	123	160	199
42"	17	39	67	101	141	184	228
48"	19	43	75	113	157	206	255

NOTES

1. THIS TABLE IS BASED ON A TEST PRESSURE OF 180 PSI (OPERATING PRESSURE + WATER HAMMER). FOR OTHER TEST PROCEDURES, ALL VALUES ARE TO BE INCREASED OR DECREASED PROPORTIONALLY.

2. IN EACH DIRECTION FROM POINT OF DEFLECTION OR TERMINATION EXCEPT FOR A TEE AT WHICH ONLY THE BRANCH IN THE DIRECTION OF THE TEE STEM.

3. IF TIE RODS ARE APPROVED BY BCDC-WWS, THEY MUST BE STAINLESS STEEL GRADE 316 RODS & NUTS. PLACE (2) RODS 5/8 INCH DIAMETER MINIMUM FOR WATERMAIN 6 INCH TO 10 INCH, AND (4) RODS 5/8 INCH DIAMETER MINIMUM FOR 12 INCH AND LARGER.

4. CONTRACTOR SHALL USE BCDC-WWS APPROVED RESTRAINED JOINTS.

5. IN-LINE VALVES SHALL BE CONSIDERED DEAD ENDS IN BOTH DIRECTIONS.

6. THIS TABLE IS PLACED HERE AS A MINIMUM REQUIREMENT FOR THRUST RESTRAINT OF GROUND BURIED PRESSURE PIPES AND NOT DOES ALLEVIATE THE DESIGN ENGINEER OF THE RESPONSIBILITY TO DESIGN PROPER THRUST RESTRAINT SPECIFIC TO THE PROPOSED PROJECT. IN THE CASE OF DUCTILE IRON PIPE, THE DESIGN ENGINEER SHALL FOLLOW THE APPLICABLE STANDARD AS SET FORTH IN THE LATEST EDITION FOR THRUST RESTRAINT DESIGN FROM THE DUCTILE IRON PIPE RESEARCH ASSOCIATION (DIPRA).

SD-4
MINIMUM PIPE RESTRAINT SCHEDULE
05/01/2004 PRESSURE PIPE

SD-5

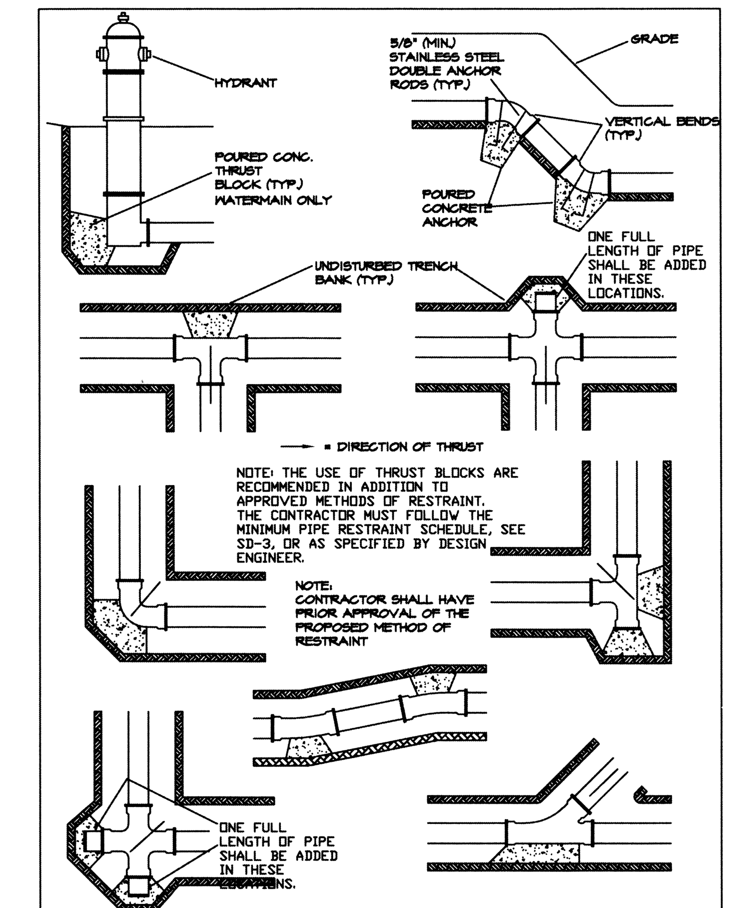

SD-5
LOCATION OF THRUST BLOCK RESTRAINT
05/01/2004 PRESSURE PIPE

SD-6

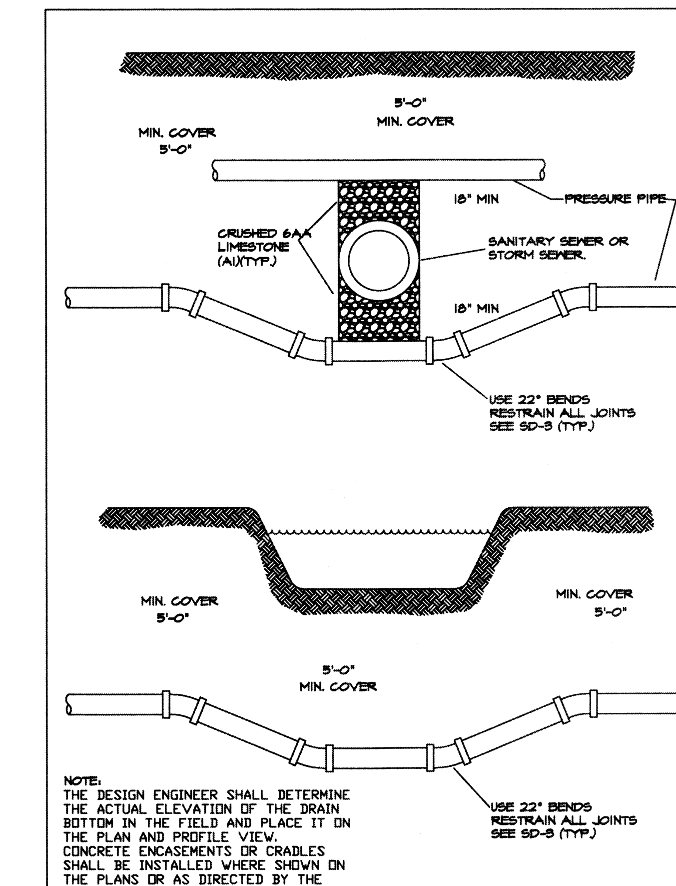

SD-6
WATERMAIN BURY AT COUNTY DRAIN, DITCH, OR STREAM
05/01/2004 PRESSURE PIPE

SD-7

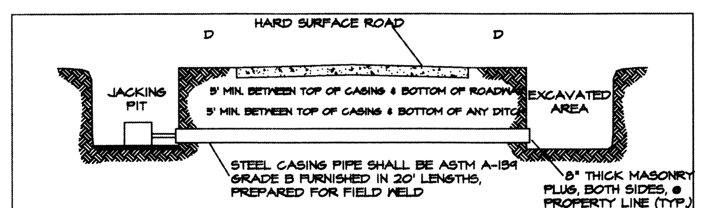

SIZE AND MATERIAL	MIN. CASING DIA. O.D. INCHES	MIN. WALL THICKNESS INCHES
8" D.I. PRESSURE PIPE OR SMALLER / 6" SANITARY SEWER V.C.P. OR P.V.C.	12.75	0.375
10"-12" D.I. PRESSURE / 8"-10" SANITARY SEWER	20.00	0.375
16" D.I. PRESSURE PIPE / 12"-15" SANITARY SEWER	24.00	0.375
18"-24" D.I. PRESSURE / 18" SANITARY SEWER CONCRETE	30.00	0.406
21"-24" SANITARY SEWER CONCRETE	36.00	0.469

MDOT
D=30' FOR TRAFFIC OVER 45 MPH
D=20' FOR TRAFFIC UNDER 45 MPH

GCRC
D=10' FOR ROADS WITH SHOULDER/DITCH
D=5' FOR ROADS WITH CURB AND GUTTER

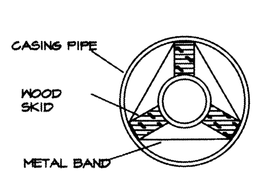

NOTES

1. ALL BORE AND JACK OPERATIONS WITHIN THE ROAD R.O.W. WILL REQUIRE A PERMIT FROM THE AGENCY HAVING AUTHORITY OVER THE ROADWAYS.

2. THE CONTRACTOR SHALL ABIDE BY ALL SAFETY PRECAUTIONS INCLUDING THE MICHIGAN MANUAL OF UNIFORM TRAFFIC CONTROL DEVICES, PART 6 AS REQUIRED BY THE AGENCY HAVING AUTHORITY OVER THE ROADWAYS.

3. THE CONTRACTOR SHALL PROTECT AND RESTORE ALL PROPERTY.

4. THE CONTRACTOR SHALL NAME THE AGENCY HAVING AUTHORITY OVER THE ROADWAYS AS AN ADDITIONAL NAMED INSURED FOR CONTINGENT LIABILITY FOR THE PROPOSED CONSTRUCTION.

5. THE CONTRACTOR SHALL ABIDE BY ALL CONDITIONS STATED IN THE GCRC MEMO OF 9-1-75 LABELED SANITARY SEWER AND WATERMAIN INSTALLATION WITHIN THE LIMITS OF COUNTY HIGHWAYS OR THE REQUIREMENTS OF THE AGENCY HAVING AUTHORITY OVER THE ROADWAYS.

6. THE SHEETING OF THE FRONT FACE OF THE BORE PIT WILL BE REQUIRED IF UNSTABLE SOIL CONDITIONS ARE ENCOUNTERED.

7. THE AUGER MUST ALWAYS PROCEED THE CASING PIPE HEAD.

8. THE CONTRACTOR SHALL NOTIFY THE AGENCY HAVING AUTHORITY OVER THE ROADWAYS A MINIMUM OF 72 HOURS PRIOR TO BEGINNING CONSTRUCTION.

9. WOOD SKIDS AND STAINLESS STEEL METAL BANDS MUST BE INSTALLED FOR ALL BORES TO KEEP THE CARRIER PIPE ON LINE AND GRADE. THE MAXIMUM DISTANCE FROM THE I.D. OF THE CASING PIPE TO THE OUTSIDE EDGE OF THE SKID SHALL BE 1".

10. THE ENDS OF THE CASING PIPE SHALL BE BULK HEADED WITH AN 8" WATER TIGHT MASONRY BULKHEAD.

SD-7
BORE & JACK CONSTRUCTION ON ALL ROADS
05/01/2004 PRESSURE PIPE

SD-8

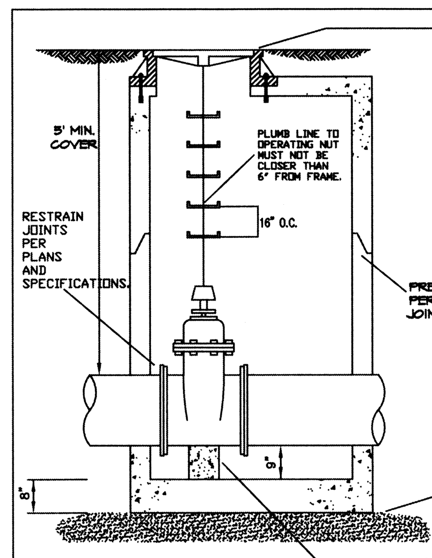

STANDARD VALVES IN ROADWAYS	
VALVE SIZE	MIN. BASIN SIZE
6"	4' DIA. MH.
8"	4' DIA. MH.
10" - 12"	4' DIA. MH.
16" - 20"	5' DIA. MH.
24"	6' DIA. MH.
30" - 42"	8' DIA. MH.

1. VALVE MANHOLES SHALL BE USED UNDER PAVED AREAS, SEE ABOVE TABLE. ALL PRESSURE TAPS & CUT-IN VALVES, 8" AND OVER, MUST BE ENCLOSED WITHIN A CONCRETE VALVE MANHOLE.

2. ALL OTHER VALVES ARE REQUIRED TO HAVE VALVE BOXES. SEE SD-12.

3. CENTER THE OPERATING NUT IN THE MIDDLE OF THE FRAME AND COVER.

4. RESILIENT SEATED WEDGE GATE VALVES ARE MANDATORY UP TO 20". BUTTERFLY VALVES ARE ACCEPTABLE FOR SIZES 24" AND LARGER. SEE SD-9.

5. TWO CONCRETE ADJUSTING RINGS ARE ALLOWED WITH A TOTAL MAXIMUM ADJUSTMENT OF 9".

SD-8
IN-LINE GATE VALVE IN ROADWAY
05/01/2004 PRESSURE PIPE

SD-9

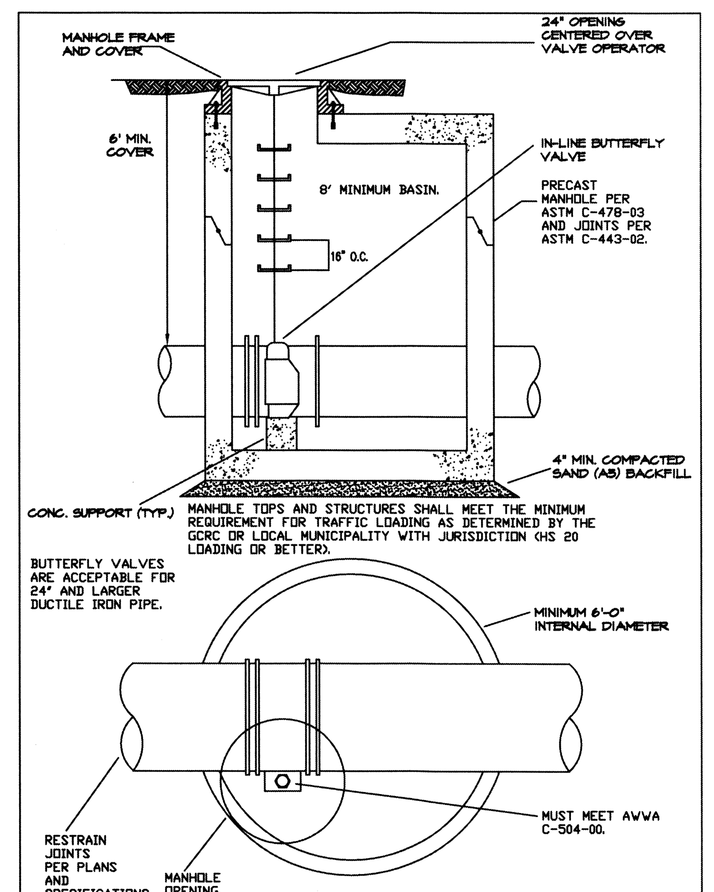

SD-9
IN-LINE BUTTERFLY VALVE IN ROADWAYS
05/01/2004 PRESSURE PIPE

SD-10

NOTES

1. ALL PRESSURE TAPS MUST BE INSTALLED IN A CONCRETE VALVE MANHOLE.

2. ALL TAPPING SLEEVES SHALL BE MECHANICAL JOINT BY FLANGED OUTLET, ALL STAINLESS STEEL OR CAST IRON, BUILT IN TWO SECTIONS.

3. APPROVED MECHANICAL JOINT SLEEVE: ROMAC 452 ALL 316 STAINLESS STEEL, CLOW F5205, MUELLER H-615, AMERICAN DARLING H-1004, OR BCDC-WWS APPROVED ALTERNATE.

4. THE OUTLET FLANGE IS CLASS 125 ANS/B16.1.

5. THE TAPPING TEE SHALL HAVE A BUILT-IN TEST PLUG.

6. THE GASKET FOR MAINLINE SHALL BE MADE FOR THE PIPE MATERIAL IN PLACE, DUCTILE IRON CLASS 52-54.

7. THE VALVE SHALL BE FLANGED BY RESTRAINED JOINT.

8. THE VALVE SHALL HAVE OVER SIZED SEAT RINGS TO PERMIT ENTRY OF THE TAPPING MACHINE CUTTERS.

9. THE VALVE SHALL MEET ALL REQUIREMENTS OF AWWA C509 OR C515.

10. THE TOP OPENING SHALL BE CENTERED ON THE VALVE OPERATING NUT.

11. SET MANHOLE FRAME AND COVER ON TOP OF SLAB.

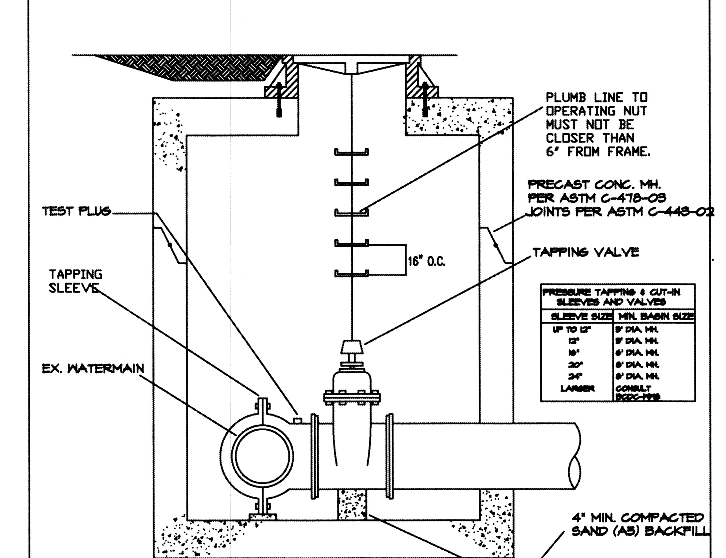

PRESSURE TAPPING & CUT-IN SLEEVES AND VALVES	
SLEEVE SIZE	MIN. BASIN SIZE
UP TO 12"	5' DIA. MH.
12"	5' DIA. MH.
16"	6' DIA. MH.
20"	8' DIA. MH.
24"	8' DIA. MH.
LARGER	CONSULT BCDC-WWS

SD-10
PRESSURE TAPPING SLEEVE AND VALVE
05/01/2004 PRESSURE PIPE

SD-11

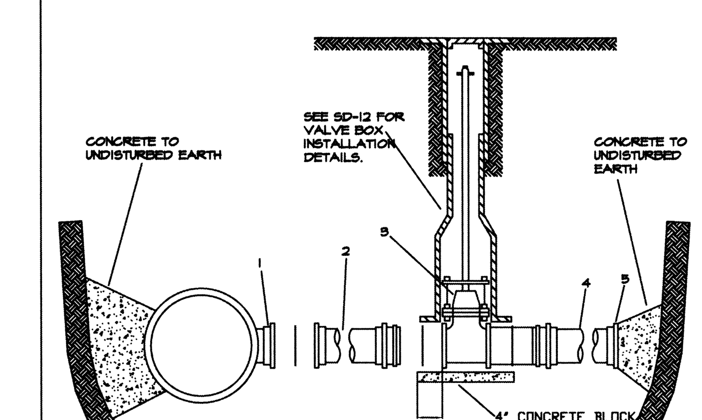

1. RESTRAINED JOINT MAINLINE TEE WITH RESTRAINED JOINT OUTLET.

2. ANCHORING COUPLING

3. RESILIENT SEATED GATE VALVE MJ X MJ.

4. EXTEND A MINIMUM OF ONE PIPE LENGTH AFTER THE VALVE.

5. RESTRAIN AND PLUG. PLACE A CONCRETE BRACE TO UNDISTURBED EARTH. CONCRETE SHALL NOT COVER PLUGS, BOLTS, ETC.

6. ALL FITTINGS SHALL HAVE AN APPROVED METHOD OF RESTRAINT, INCLUDING FITTINGS INSIDE THE MANHOLE.

SD-11
FUTURE VALVE
05/01/2004 PRESSURE PIPE

SD-12

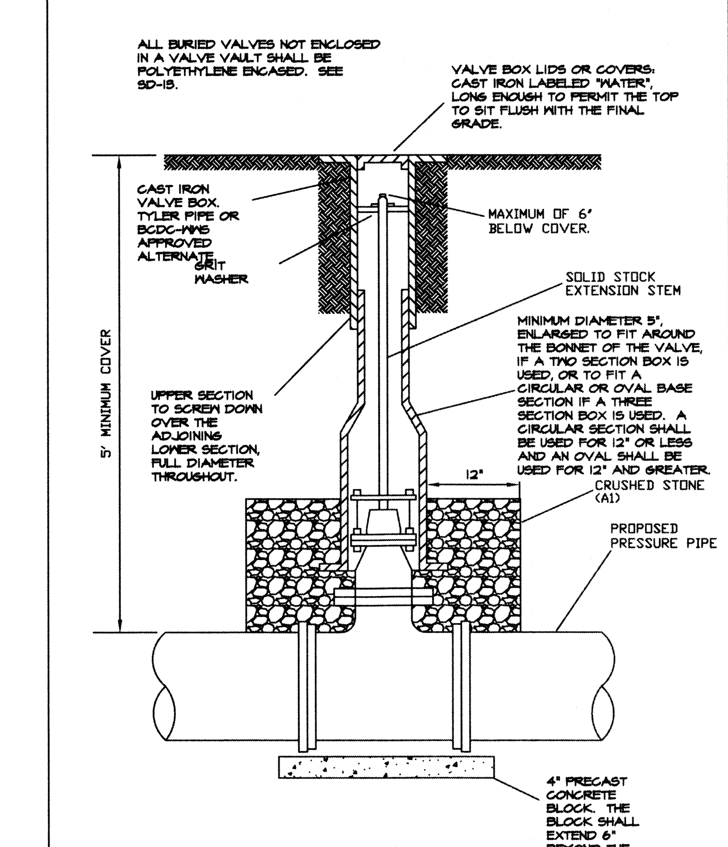

SD-12
VALVE BOX
05/01/2004 PRESSURE PIPE

SD-13

1. ALL PIPE SHALL BE WRAPPED, EXCEPT IN MANHOLES.

2. CIRCUMFERENTIAL WRAPS OF MANUFACTURER RECOMMENDED TAPE SHALL BE PLACED AT NO GREATER THAN FOUR FOOT INTERVALS ALONG THE BARREL OF THE PIPE WITH THE EXCESS FOLDED OVER THE TOP TO TAKE OUT EXCESS SLACK HELPING TO MINIMIZE THE SPACE BETWEEN THE POLYETHYLENE AND THE PIPE. COMPLETE THE INSTALLATION BY OVERLAPPING THE POLYETHYLENE TUBE WRAP AT EACH END AND SEAL ENDS PER AWWA C105/A21.5-99.

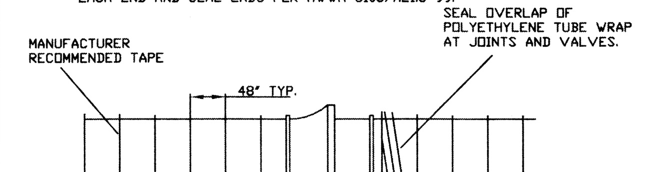

POLYETHYLENE WRAP: CROSS-LAMINATED HIGH DENSITY AND MANUFACTURED OF VIRGIN POLYETHYLENE MATERIAL CONFORMING TO THE REQUIREMENTS OF ASTM D-4976. RAW MATERIALS USED FOR THE FILM, ITS STRENGTH, THICKENS, TUBE SIZE, OR SHEET WIDTH MUST CONFORM TO AWWA C105/A21.5-99.

FOR ODD-SHAPED APPURTENANCES: WRAP VALVES, TEES, CROSSES, AND OTHER ODD-SHAPED PIECES WHICH CANNOT BE PRACTICALLY BE WRAPPED IN A TUBE, WITH A FLAT SHEET OR SPLIT LENGTH OF POLYETHYLENE TUBE, WITH A FLAT SHEET OR SPLIT LENGTH OF POLYETHYLENE TUBE. PASS THE SHEET UNDER THE APPURTENANCE AND BRING AROUND THE BODY. MAKE SEAMS BY BRINGING THE EDGES TOGETHER, FOLDING TWICE, AND TAPING DOWN. HANDLE SLACK WIDTH AND OVERLAP AT JOINTS AS DESCRIBED IN ASTM A 674-00 SECTION 5.2.1. TAPE POLYETHYLENE SECURELY IN PLACE AT VALVE STERN AND OTHER PENETRATIONS.

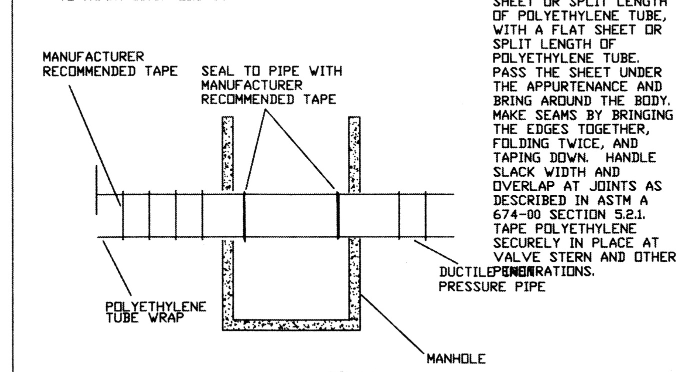

SD-13
POLYETHYLENE TUBE WRAP FOR DUCTILE IRON PIPE
05/01/2004 PRESSURE PIPE

SD-14

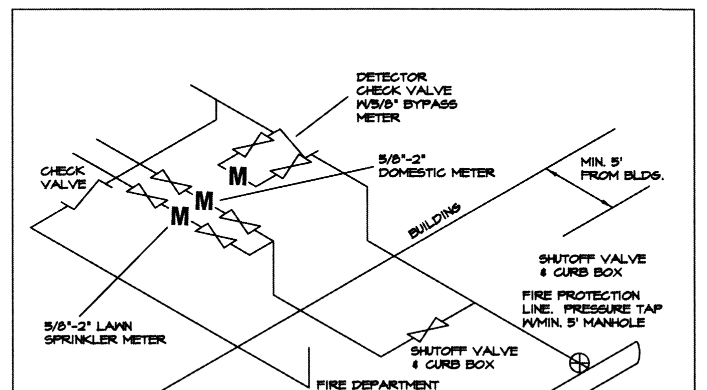

FIRE PROTECTION LINE VALVE & METER INSTALLATION

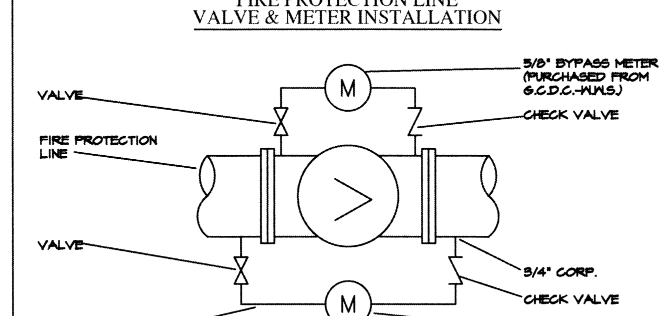

DETECTOR CHECK VALVE DETAIL

NOTE
DETECTOR CHECK VALVE SHALL BE MUELLER A-2500-602, OR BCDC-WWS APPROVED ALTERNATE, TAPPED AT FACTORY FOR BYPASS METER.

SD-14
FIRE SUPPRESSION LINE VALVE & METER INSTALLATION
05/01/2004 (WATERMAIN ONLY) PRESSURE PIPE

SD-15

NOTES

1. WATER SERVICE SHALL BE TUNNELED UNDER EXISTING PAVEMENTS, SEE SD-7.

2. A 2"X4" WOODEN MARKER PLACED 1' UNDER THE FINISHED GRADE AND PAINTED BLUE IS REQUIRED FOR ALL WATER SERVICES NOT CONNECTED TO THE BUILDING.

3. THE VALVE BOX SHALL BE EITHER DUCTILE IRON OR CAST IRON AND A MINIMUM OF 6' IN LENGTH. NO PLASTIC CURB BOXES SHALL BE ALLOWED.

4. CURB STOPS SHALL BE BALL VALVES FOR ¾", 1", 1¼", AND 2" DIAMETERS WITH COPPER TO COPPER CONNECTIONS.

5. THE CORPORATION SHALL BE FORD FS 202 OR BCDC-WWS APPROVED ALTERNATE. USE BRASS DOUBLE SADDLES WITH STAINLESS BANDS FOR 1¼" AND 2" TAPS.

6. IF THE PUBLIC WATERMAIN IS ON AN EASEMENT, THE CURB STOP SHALL BE PLACED AT THE EDGE OF THE EASEMENT CLOSEST TO THE BUILDING TO BE SERVED.

7. WATER SERVICE IS TO BE PLACED AT THE CENTER OF FRONTAGE, WITH SANITARY SERVICE.

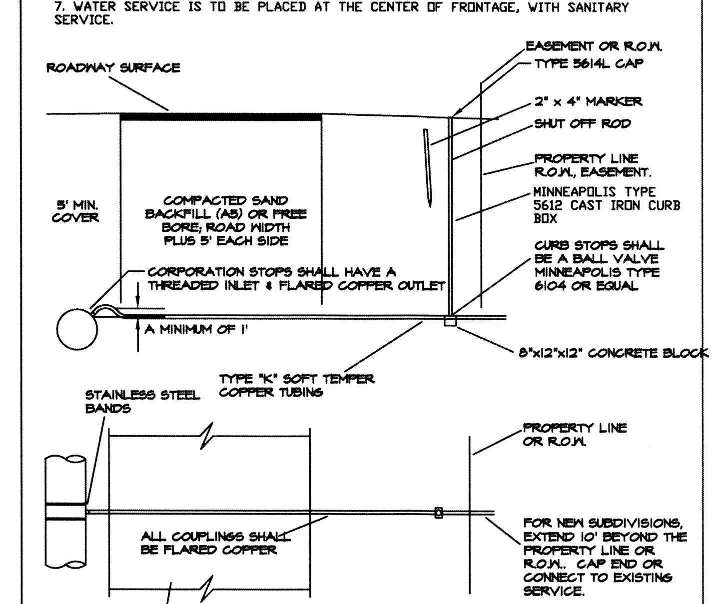

SD-15
3/4" TO 2" WATER SERVICE CONNECTIONS
05/01/2004 (WATERMAIN ONLY) PRESSURE PIPE

SD-16

NOTES

1. THE PUMPER NOZZLE SHALL FACE THE STREET. PROVIDE A MINIMUM OF 10 FEET, MEASURED FROM THE NOZZLE, CLEAR OF ANY OBSTRUCTIONS.

2. SET THE HYDRANT GRADE LINE AT PROPOSED GRADE OR AS FIELD DIRECTED.

3. SET THE VALVE BOX COVER FLUSH WITH THE EXISTING GRADE LEVEL.

4. ALL WORK FROM THE CENTERLINE OF THE MAIN, TO AND INCLUDING THE HYDRANT, SHALL BE PAID FOR BY THE UNIT PRICE BID ITEM FOR HYDRANTS.

5. ALL JOINTS SHALL BE RESTRAINED BY BCDC-WWS APPROVED RESTRAINED JOINTS.

6. HYDRANT BARRELS ARE TO BE PAINTED YELLOW. CAPS WILL BE COLOR CODED TO MAIN SIZE: 6"-RED, 8"-ORANGE, 10" AND 12"-GREEN, 16" AND 20" -BROWN, 24" AND GREATER-BLUE.

7. 90° HYDRANT TEES ARE APPROVED WHERE SPACE REQUIREMENTS ARE LIMITED.

8. HYDRANT DRAIN SHALL BE PERMANENTLY SEALED AT THE FACTORY WITH A BRONZE PLUG.

9. THE HYDRANT SHOULD BE PLACED AT PROPERTY LINES AND WITHIN THE R.O.W. WHEN POSSIBLE.

10. LOCAL MUNICIPALITIES MAY REQUIRE STORZ FITTINGS. REFER TO PROJECT PLANS AND SPECIFICATIONS FOR SIZE AND TYPE.

HYDRANTS MUST MEET AWWA C502-94 AND SHALL BE EJIW 5BR, WATEROUS WB67-250 (TRAFFIC MODEL ONLY), OR BCDC-WWS APPROVED ALTERNATE. MIN. 5' BURY.

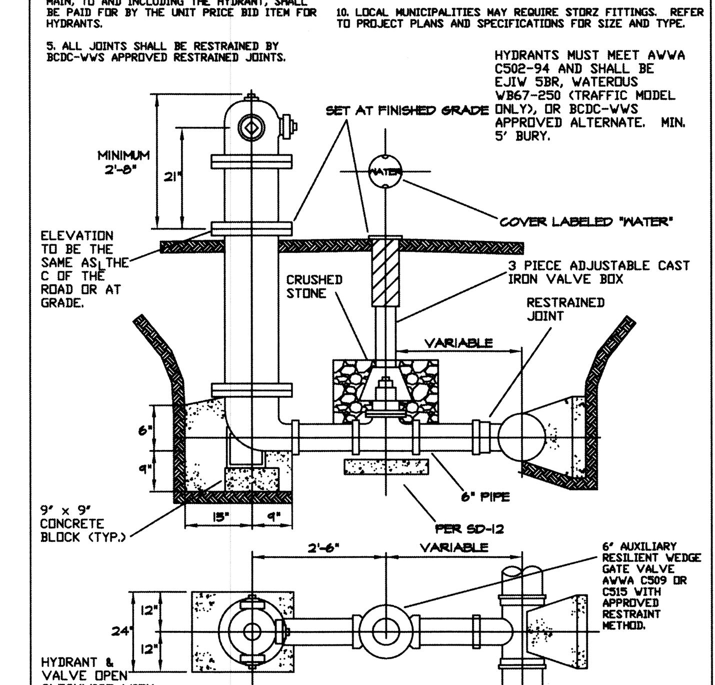

SD-16
FIRE HYDRANT DETAIL
05/01/2004 (WATERMAIN ONLY) PRESSURE PIPE

PRESSURE PIPE CONSTRUCTION STANDARD DETAILS

REVISIONS

CREEKWOOD ARCHITECTURE, INC.
1111 s. creekwood
burton, michigan 48509
tel. (810) 742-0480
fax (810) 742-8393

SHEET TITLE
DETAILS

PROJECT
NEW OFFICE BUILDING for
WALKER JUNE CALHOUN CPA's
CREEKWOOD TRAIL BURTON, MI.

CHECKED BY R.A.S.
DRAWN BY B.A.C.

JOB NO. 150001-OF
DATE 12 OCT 2015
SHEET NO.
S6
OF 8

Attachment: 16-07 (2118 : SPR #16-07)

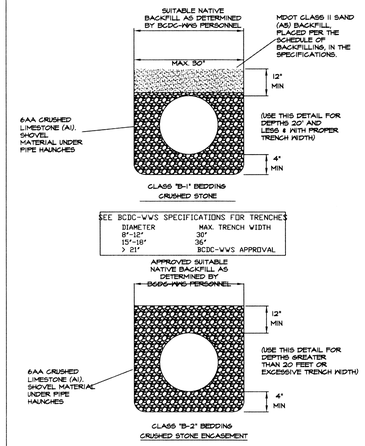

SD-1
BEDDING & TRENCH DETAILS

05/01/2004 SANITARY

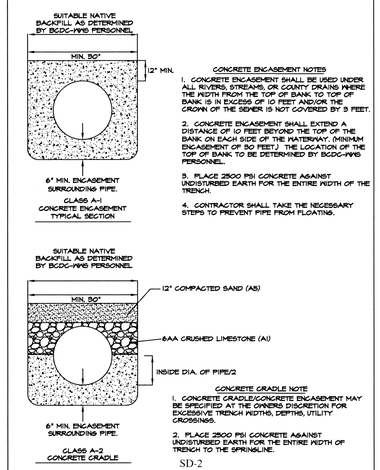

CONCRETE ENCASEMENT NOTES

1. CONCRETE ENCASEMENT SHALL BE USED UNDER ALL RIVERS, STREAMS, OR COUNTY DRAINS WHERE THE WIDTH FROM THE TOP OF BANK TO TOP OF BANK IS IN EXCESS OF 10 FEET AND/OR THE CROWN OF THE SEWER IS NOT COVERED BY 3 FEET.

2. CONCRETE ENCASEMENT SHALL EXTEND A DISTANCE OF 10 FEET BEYOND THE TOP OF THE BANK ON EACH SIDE OF THE WATERWAY. (MINIMUM ENCASEMENT OF 30 FEET.) THE LOCATION OF THE TOP OF BANK TO BE DETERMINED BY BCDC-WWS PERSONNEL.

3. PLACE 2500 PSI CONCRETE AGAINST UNDISTURBED EARTH FOR THE ENTIRE WIDTH OF THE TRENCH.

4. CONTRACTOR SHALL TAKE THE NECESSARY STEPS TO PREVENT PIPE FROM FLOATING.

CONCRETE CRADLE NOTE

1. CONCRETE CRADLE/CONCRETE ENCASEMENT MAY BE SPECIFIED AT THE OWNERS DISCRETION FOR EXCESSIVE TRENCH WIDTHS, DEPTHS, UTILITY CROSSINGS.

2. PLACE 2500 PSI CONCRETE AGAINST UNDISTURBED EARTH FOR THE ENTIRE WIDTH OF TRENCH TO THE SPRINGLINE.

SD-2
PROTECTION OF SANITARY SEWERS
BY CONCRETE ENCASEMENT OR CRADLE

05/01/2004 SANITARY

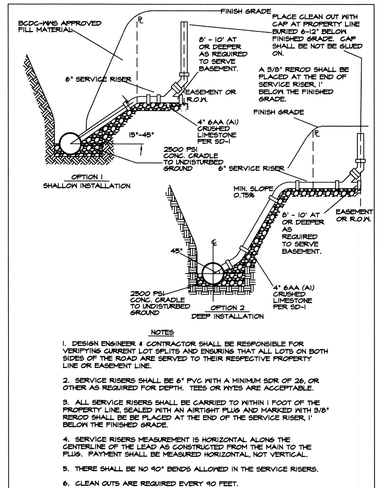

NOTES

1. DESIGN ENGINEER & CONTRACTOR SHALL BE RESPONSIBLE FOR VERIFYING CURRENT LOT SPLITS AND ENSURING THAT ALL LOTS ON BOTH SIDES OF THE ROAD ARE SERVED TO THEIR RESPECTIVE PROPERTY LINE OR EASEMENT LINE.

2. SERVICE RISERS SHALL BE 6" PVC WITH A MINIMUM SDR OF 26, OR OTHER AS REQUIRED FOR DEPTH. TEES OR WYES ARE ACCEPTABLE.

3. ALL SERVICE RISERS SHALL BE CARRIED TO WITHIN 1 FOOT OF THE PROPERTY LINE, SEALED WITH AN AIRTIGHT PLUG AND MARKED WITH 3/8" REROD SHALL BE BE PLACED AT THE END OF THE SERVICE RISER, 1' BELOW THE FINISHED GRADE.

4. SERVICE RISERS MEASUREMENT IS HORIZONTAL ALONG THE CENTERLINE OF THE LEAD AS CONSTRUCTED FROM THE MAIN TO THE PLUG. PAYMENT SHALL BE MEASURED HORIZONTAL, NOT VERTICAL.

5. THERE SHALL BE NO 90° BENDS ALLOWED IN THE SERVICE RISERS.

6. CLEAN OUTS ARE REQUIRED EVERY 90 FEET.

SD-3
RISER AND SERVICE LEAD

05/01/2004 SANITARY

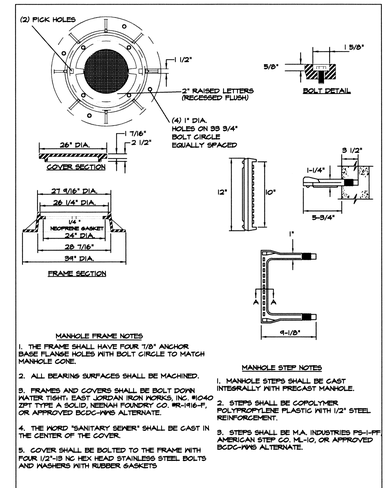

MANHOLE FRAME NOTES

1. THE FRAME SHALL HAVE FOUR 7/8" ANCHOR BASE FLANGE HOLES WITH BOLT CIRCLE TO MATCH MANHOLE CONE.

2. ALL BEARING SURFACES SHALL BE MACHINED.

3. FRAMES AND COVERS SHALL BE BOLT DOWN WATER TIGHT. EAST JORDAN IRON WORKS, INC. #1040 ZPT TYPE A BOLD, NEENAH FOUNDRY CO. #R-1916-F, OR APPROVED BCDC-WWS ALTERNATE.

4. THE WORD "SANITARY SEWER" SHALL BE CAST IN THE CENTER OF THE COVER.

5. COVER SHALL BE BOLTED TO THE FRAME WITH FOUR 1/2"-13 NC HEX HEAD STAINLESS STEEL BOLTS AND WASHERS WITH RUBBER GASKETS

MANHOLE STEP NOTES

1. MANHOLE STEPS SHALL BE CAST INTEGRALLY WITH PRECAST MANHOLE.

2. STEPS SHALL BE COPOLYMER POLYPROPYLENE PLASTIC WITH 1/2" STEEL REINFORCEMENT.

3. STEPS SHALL BE M.A. INDUSTRIES PS-1-PF AMERICAN STEP CO. ML-10, OR APPROVED BCDC-WWS ALTERNATE.

SD-4
MANHOLE FRAME, COVER & STEP

05/01/2004 SANITARY

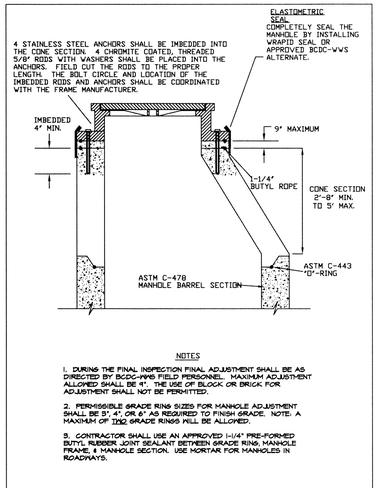

NOTES

1. DURING THE FINAL INSPECTION FINAL ADJUSTMENT SHALL BE AS DIRECTED BY BCDC-WWS FIELD PERSONNEL. MAXIMUM ADJUSTMENT ALLOWED SHALL BE 4". THE USE OF BLOCK OR BRICK FOR ADJUSTMENT SHALL NOT BE PERMITTED.

2. PERMISSIBLE GRADE RING SIZES FOR MANHOLE ADJUSTMENT SHALL BE 3", 4", OR 6" AS REQUIRED TO FINISH GRADE. NOTE: A MAXIMUM OF TWO GRADE RINGS WILL BE ALLOWED.

3. CONTRACTOR SHALL USE AN APPROVED 1-1/4" PRE-FORMED BUTYL RUBBER JOINT SEALANT BETWEEN GRADE RING, MANHOLE FRAME, & MANHOLE SECTION. USE MORTAR FOR MANHOLES IN ROADWAYS.

SD-5
MANHOLE FRAME & ADJUSTMENT

05/01/2004 SANITARY

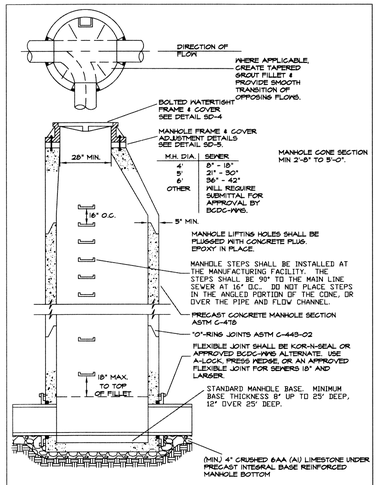

SD-6
PRECAST FLEXIBLE JOINT MANHOLE

05/01/2004 SANITARY

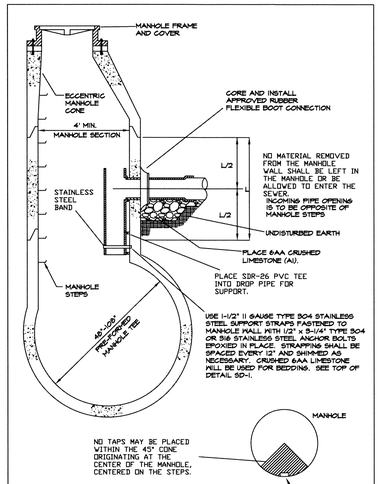

SD-7
CONNECTION TO "T" MANHOLE

05/01/2004 SANITARY

NOTES

1. A DROP PIPE CONNECTION IS REQUIRED FOR ALL SEWERS WHERE INCOMING INVERT ELEVATIONS EXCEEDS 30" ABOVE OUTLET INVERT ELEVATION.

2. DROP PIPE SHALL BE THE SAME MATERIAL AS THE MAIN LINE WITH PREMIUM O-RING JOINTS.

3. OBTAIN APPROVAL FROM BCDC-WWS PRIOR TO POURING CONCRETE ENCASEMENT ON EXISTING MANHOLES.

ALTERNATE METHOD

USE 1-1/2" II GAUGE TYPE 304 STAINLESS STEEL SUPPORT STRAPS FASTENED TO MANHOLE WALL WITH 1/2" x 3-1/4" TYPE 304 OR 316 STAINLESS STEEL ANCHOR BOLTS EPOXIED IN PLACE. STRAPPING SHALL BE SPACED EVERY 12" AND SHIMMED AS NECESSARY. CRUSHED 6AA LIMESTONE WILL BE USED FOR BEDDING. THE CRUSHED STONE SHALL ENCASE THE PIPE A MINIMUM OF 6" IN ALL DIRECTIONS FROM THE PIPE. SEE DETAIL BELOW.

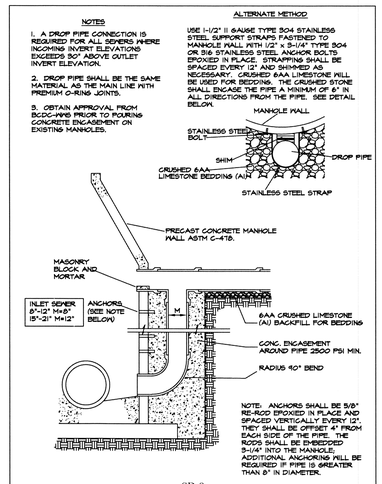

SD-8
CONCRETE ENCASED EXTERNAL
DROP PIPE

05/01/2004 SANITARY

NOTES

1. ALL SANITARY SEWERS SHALL BE TESTED FOR INFILTRATION.

2. A NEW INFILTRATION TEST MANHOLE MUST BE CONSTRUCTED FOR EACH SEPARATE DIVISION OR SECTION OF A PROJECT. (SEE DETAIL)

3. NO CONNECTION SHALL BE MADE TO THE EXISTING SANITARY SEWER SYSTEM UNTIL ALL TESTING OF THE SEWER HAS BEEN PERFORMED AND APPROVED BY BCDC-WWS PERSONNEL.

4. TESTING WEIRS ARE AVAILABLE FROM BCDC-WWS WITH PRIOR NOTICE. ALL EXTENSIONS OF 8"-21" SEWER SHALL BE AIR TESTED. ALL LINES 24" AND LARGER SHALL BE TESTED WITH A "V" NOTCH WEIR.

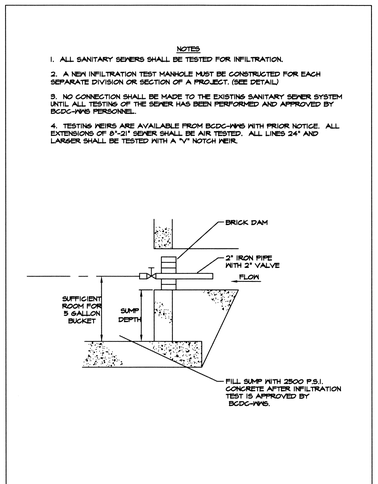

SD-9
INFILTRATION TEST MANHOLE

05/01/2004 SANITARY

METHOD #1
FINAL CONNECTION PROCEDURE

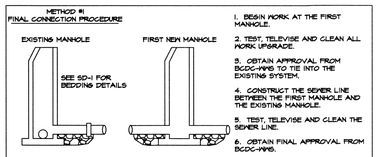

1. BEGIN WORK AT THE FIRST MANHOLE.

2. TEST, TELEVISE AND CLEAN ALL WORK UPGRADE.

3. OBTAIN APPROVAL FROM BCDC-WWS TO TIE INTO THE EXISTING SYSTEM.

4. CONSTRUCT THE SEWER LINE BETWEEN THE FIRST MANHOLE AND THE EXISTING MANHOLE.

5. TEST, TELEVISE AND CLEAN THE SEWER LINE.

6. OBTAIN FINAL APPROVAL FROM BCDC-WWS.

METHOD #2
FINAL CONNECTION PROCEDURE

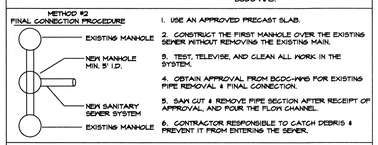

1. USE AN APPROVED PRECAST SLAB.

2. CONSTRUCT THE FIRST MANHOLE OVER THE EXISTING SEWER WITHOUT REMOVING THE EXISTING MAIN.

3. TEST, TELEVISE, AND CLEAN ALL WORK IN THE SYSTEM.

4. OBTAIN APPROVAL FROM BCDC-WWS FOR EXISTING PIPE REMOVAL & FINAL CONNECTION.

5. SAW CUT & REMOVE PIPE SECTION AFTER RECEIPT OF APPROVAL, AND POUR THE FLOW CHANNEL.

6. CONTRACTOR RESPONSIBLE TO CATCH DEBRIS & PREVENT IT FROM ENTERING THE SEWER.

METHOD #3
FINAL CONNECTION PROCEDURE

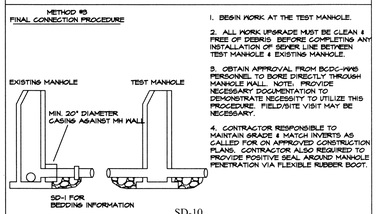

1. BEGIN WORK AT THE TEST MANHOLE.

2. ALL WORK UPGRADE MUST BE CLEAN & FREE OF DEBRIS BEFORE COMPLETING ANY INSTALLATION OF SEWER LINE BETWEEN TEST MANHOLE & EXISTING MANHOLE.

3. OBTAIN APPROVAL FROM BCDC-WWS PERSONNEL TO BORE DIRECTLY THROUGH MANHOLE WALL. NOTE: PROVIDE NECESSARY DOCUMENTATION TO DEMONSTRATE NECESSITY TO UTILIZE THIS PROCEDURE. FIELD/SITE VISIT MAY BE NECESSARY.

4. CONTRACTOR RESPONSIBLE TO MAINTAIN GRADE & MATCH INVERTS AS CALLED FOR ON APPROVED CONSTRUCTION PLANS. CONTRACTOR ALSO REQUIRED TO PROVIDE POSITIVE SEAL AROUND MANHOLE PENETRATION VIA FLEXIBLE RUBBER BOOT.

SD-10
SANITARY SEWER FINAL CONNECTION

05/01/2004 SANITARY

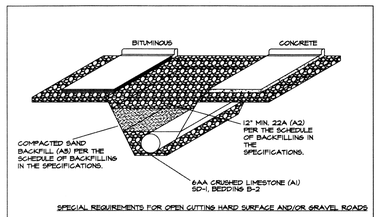

SPECIAL REQUIREMENTS FOR OPEN CUTTING HARD SURFACE AND/OR GRAVEL ROADS

1. THE CONTRACTOR SHALL ACQUIRE A SPECIAL OPEN CUT APPROVAL FROM THE AGENCY HAVING AUTHORITY OVER THE ROADWAYS.

2. THE CONTRACTOR SHALL SUPPLY CONTINGENT LIABILITY INSURANCE FOR THE AGENCY HAVING AUTHORITY OVER THE ROADWAYS.

3. THE PROTECTION OF THE WORK SHALL BE IN ACCORDANCE WITH THE "MICHIGAN MANUAL OF UNIFORM TRAFFIC CONTROL DEVICES, PART 6". BARRICADES, WARNING AND LIGHTING NECESSARY FOR PUBLIC SAFETY TO BE APPROVED BY THE ENGINEER AND THE AGENCY HAVING AUTHORITY OVER THE ROADWAYS PRIOR TO STARTING CONSTRUCTION.

4. CONTRACTOR SHALL EXCAVATE ALL MATERIAL TO PROPOSED GRADE.

5. THE SANITARY SEWER SHALL BE PLACED ON 6AA CRUSHED LIMESTONE (A1) BEDDING, PER SD-1 B-2 BEDDING.

6. ALL BACKFILL SHALL BE MDOT CLASS II SAND (A3), PLACED PER THE SCHEDULE OF BACKFILLING.

7. THE SAND BACKFILL SHALL EXTEND FROM THE OUTSIDE EDGE OF SHOULDER TO OUTSIDE EDGE OF SHOULDER, OR FOR CURB AND GUTTER SECTIONS, SHALL BE EXTENDED 5' FROM THE OUTSIDE EDGE OF THE CURB TO THE OUTSIDE EDGE OF THE GUTTER.

8. THE FINAL 12" OF ALL BACKFILL SHALL BE 22A LIMESTONE (A2) SUBBASE MODIFIED PER SCRC SPECIFICATIONS. ALL SHOULDERS SHALL BE REPAIRED PER THE AGENCY HAVING AUTHORITY OVER THE ROADWAYS.

9. THE CONTRACTOR SHALL REPLACE THE ROAD SURFACE WITH THE AGENCY HAVING AUTHORITY OVER THE ROADWAYS APPROVED MATERIAL.

10. CONTRACTOR SHALL MAINTAIN TEMPORARY ACCESS TO ALL AREAS DURING CONSTRUCTION. A PUBLIC ROAD MAY BE CLOSED FOR 1/2 WIDTH CONSTRUCTION WITH SCRC APPROVAL BUT THE CLOSING TIME CANNOT EXCEED 8 HOURS. CONTRACTOR MAY USE SHOULDERS AND TEMPORARY PATCHES TO KEEP A ROAD OPEN.

SD-11
OPEN CUTTING PERPENDICULAR TO ROAD

05/01/2004 SANITARY

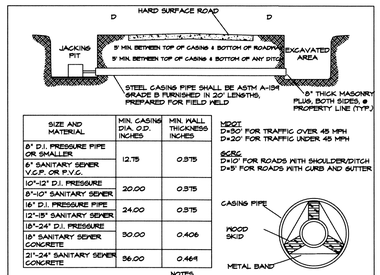

SIZE AND MATERIAL	MIN. CASING DIA. O.D. INCHES	MIN. WALL THICKNESS INCHES
8" D.I. PRESSURE PIPE OR SMALLER	12.75	0.375
8" SANITARY SEWER V.C.P. OR P.V.C.		
10"-12" D.I. PRESSURE	20.00	0.375
8"-10" SANITARY SEWER		
16" D.I. PRESSURE PIPE	24.00	0.375
12"-18" SANITARY SEWER		
18"-24" D.I. PRESSURE	30.00	0.406
18" SANITARY SEWER CONCRETE		
21"-24" SANITARY SEWER CONCRETE	36.00	0.464

MDOT
D=30" FOR TRAFFIC OVER 45 MPH
D=20" FOR TRAFFIC UNDER 45 MPH

SCRC
D=10" FOR ROADS WITH SHOULDER/DITCH
D=5' FOR ROADS WITH CURB AND GUTTER

NOTES

1. ALL BORE AND JACK OPERATIONS WITHIN THE ROAD R.O.W. WILL REQUIRE A PERMIT FROM THE AGENCY HAVING AUTHORITY OVER THE ROADWAYS.

2. THE CONTRACTOR SHALL ABIDE BY ALL SAFETY PRECAUTIONS INCLUDING THE MICHIGAN MANUAL OF UNIFORM TRAFFIC CONTROL DEVICES, PART 6 AS REQUIRED BY THE AGENCY HAVING AUTHORITY OVER THE ROADWAYS.

3. THE CONTRACTOR SHALL PROTECT AND RESTORE ALL PROPERTY.

4. THE CONTRACTOR SHALL NAME THE AGENCY HAVING AUTHORITY OVER THE ROADWAYS AS AN ADDITIONAL NAMED INSURED FOR CONTINGENT LIABILITY FOR THE PROPOSED CONSTRUCTION.

5. THE CONTRACTOR SHALL ABIDE BY ALL CONDITIONS STATED IN THE SCRC MEMO OF 4-1-75 LABELED SANITARY SEWER AND WATERMAIN INSTALLATION WITHIN THE LIMITS OF COUNTY HIGHWAYS OR THE REQUIREMENTS OF THE AGENCY HAVING AUTHORITY OVER THE ROADWAYS.

6. THE SHEETING OF THE FRONT FACE OF THE BORE PIT WILL BE REQUIRED IF UNSTABLE SOIL CONDITIONS ARE ENCOUNTERED.

7. THE AUGER MUST ALWAYS PROCEED THE CASING PIPE HEAD.

8. THE CONTRACTOR SHALL NOTIFY THE AGENCY HAVING AUTHORITY OVER THE ROADWAYS A MINIMUM OF 72 HOURS PRIOR TO BEGINNING CONSTRUCTION.

9. WOOD SKIDS AND STAINLESS STEEL METAL BANDS MUST BE INSTALLED FOR ALL BORES TO KEEP THE CARRIER PIPE ON LINE AND GRADE. THE MAXIMUM DISTANCE FROM THE I.D. OF THE CASING PIPE TO THE OUTSIDE EDGE OF THE SKID SHALL BE 1".

10. THE ENDS OF THE CASING PIPE SHALL BE BULK HEADED WITH AN 8" WATER TIGHT MASONRY BULKHEAD.

SD-12
BORE & JACK CONSTRUCTION
ON ALL ROADS

05/01/2004 SANITARY

GENERAL NOTES FOR
SANITARY SEWER CONSTRUCTION

1. ALL SANITARY SEWER SHALL BE TELEVISED AND VIDEOTAPED WITH REPORTS SUBMITTED TO BCDC-WWS.

2. ALL PVC MAINLINE PIPE IS TO BE MANDRELLED BY A 9-SIDED MANDREL MEETING BCDC-WWS SPECIFICATIONS. THE MAXIMUM ALLOWABLE DEFLECTION IS 5%.

3. EACH 6" SERVICE CONNECTION SHALL BE STAKED, WITH AN INVERT ELEVATION, BY THE FIELD ENGINEER.

4. THE REPAIR OF SDR-26 PVC PIPE IS TO BE DONE WITH SDR-26 REPAIR COUPLINGS. FERNCO COUPLINGS ARE NOT ALLOWED.

6. ALL PROJECTS SHALL HAVE A MANDATORY PRE-CONSTRUCTION MEETING WITH BCDC-WWS.

REVISIONS

CREEKWOOD ARCHITECTURE, INC.
1111 s. creekwood burton, michigan 48509
tel. (810) 742-0480 fax (810) 742-8393

SHEET TITLE
DETAILS

PROJECT
NEW OFFICE BUILDING for
WALKER JUNE CALHOUN CPA's
CREEKWOOD TRAIL BURTON, MI.
DRAWN BY B.A.C. CHECKED BY R.A.S.

JOB NO. 150001-0P

DATE 12 OCT 2015

SHEET NO.
S7
OF 8

Attachment: 16-07 (2118 : SPR #16-07)

GENERAL CONSTRUCTION NOTES

1. STANDARD SPECIFICATIONS & DETAILS
ALL CONSTRUCTION AND MATERIALS SHALL CONFORM TO THE LATEST GENESEE COUNTY STANDARD SPECIFICATIONS AND STANDARD DETAILS FOR SANITARY SEWER, PRESSURE PIPE, AND PUMP STATION CONSTRUCTION. ANY DEVIATIONS FROM THE BCDC-WWS APPROVED PLANS WILL NOT BE PERMITTED. IF IT BECOMES NECESSARY TO REVISE PLAN THEY SHALL BE RESUBMITTED TO BCDC-WWS FOR APPROVAL.

2. PRE-CONSTRUCTION MEETING
A PRE-CONSTRUCTION MEETING SHALL BE HELD AT THE BCDC-WWS OFFICE. NO PRE-CONSTRUCTION MEETING SHALL BE HELD PRIOR TO OBTAINING THE STATE CONSTRUCTION PERMIT. THE MEETING TIME, PLACE, AND ATTENDEES SHALL BE ARRANGED BY THE DESIGN ENGINEER FOR THE PROJECT. BCDC-WWS, BCDC-SWM, THE MUNICIPALITY, AGENCY HAVING AUTHORITY OVER THE ROADWAYS, PROJECT OWNER, CONTRACTOR, AND ANY AFFECTED UTILITIES, SHALL BE INVITED, AS A MINIMUM, TO THE PRE-CONSTRUCTION MEETING.

3. MISS DIG UTILITY ALERT
THREE (3) WORKING DAYS PRIOR TO BEGINNING CONSTRUCTION, IT SHALL BE THE CONTRACTOR'S RESPONSIBILITY TO CONTACT MISS DIG UTILITY PROTECTION SERVICE (1-800-482-7171) TO VERIFY THE LOCATION OF ALL EXISTING UTILITIES. THE CONTRACTOR SHALL ASSUME RESPONSIBILITY FOR THE PROTECTION OF ALL EXISTING UTILITIES DURING CONSTRUCTION. ALL UTILITIES DAMAGED DURING CONSTRUCTION SHALL BE REPAIRED IN ACCORDANCE WITH THE UTILITY OWNERS REQUIREMENTS.

4. FIELD LOCATION OF UTILITIES
PRIOR TO BEGINNING CONSTRUCTION, THE CONTRACTOR SHALL BE REQUIRED TO EXPOSE ALL EXISTING UTILITIES THAT CROSS THE PROPOSED CONSTRUCTION SO THE DESIGN ENGINEER MAY DETERMINE IF A VERTICAL CONFLICT EXISTS BETWEEN THE EXISTING UTILITY AND THE PROPOSED CONSTRUCTION. ALL LABOR REQUIRED TO UNCOVER THE EXISTING UTILITY SHALL BE CONSIDERED INCLUDED IN THE LINEAL FEET OF PRESSURE PIPE OR SANITARY SEWER INSTALLED. THE CONTRACTOR SHALL VERIFY THE DEPTH AND HORIZONTAL LOCATIONS OF ALL UTILITIES IN SUFFICIENT TIME SUCH THAT ANY CONFLICTS CAN BE RESOLVED BEFORE WORK IS STARTED IN THAT PORTION OF THE PROJECT. THE CONTRACTOR SHALL ARRANGE FOR THE VARIOUS UTILITY OWNERS TO LOCATE, REMOVE AND REPLACE, OR RELOCATE THEIR FACILITIES. ALL COST FOR THIS SHALL BE INCLUSIVE TO THE PROJECT.

5. SUBSURFACE SOIL CONDITIONS
PRIOR TO BIDDING THE CONTRACTOR AND SUBCONTRACTORS SHALL MAKE A PERSONAL INVESTIGATION OF THE SITE AND EXISTING SURFACE AND SUBSURFACE CONDITIONS. THE CONTRACTOR IS RESPONSIBLE TO ACQUAINT THEMSELVES WITH CONDITIONS OF THE WORK AREA. THE CONTRACTOR IS ADVISED TO DETERMINE THE SUBSURFACE SOIL AND GROUND WATER CONDITIONS. DEWATERING, IF DETERMINED NECESSARY BY THE CONTRACTOR AND IF NOT SPECIFICALLY CALLED OUT IN THE CONTRACT DOCUMENTS, WILL BE INCIDENTAL TO THE COST OF INSTALLATION.

6. PERMITS AND FEES
THE CONTRACTOR/DEVELOPER SHALL OBTAIN ALL PERMITS, INCLUDING THE PAYMENT OF ANY FEES OR BONDS, REQUIRED BY ANY FEDERAL, STATE, COUNTY, LOCAL, OR PRIVATE ORGANIZATIONS, PRIOR TO ISSUANCE OF THE S-PERMIT AND COMMENCING CONSTRUCTION.

7. BCDC-WWS INSPECTION FEES
THE DEVELOPER SHALL PAY FOR ALL SANITARY SEWER AND PRESSURE PIPE INSPECTION FEES AND WATER USAGE FEES PRIOR TO APPROVAL OF THE PLANS AND THE ISSUANCE OF THE S-PERMIT.

8. SOIL EROSION CONTROL, PART 91 OF P.A. 451 OF 1994
THE CONTRACTOR/DEVELOPER SHALL COMPLY WITH ALL PROVISIONS OF PART 91, ACT 451 OF P.A. 1994, FOR SOIL EROSION AND SEDIMENTATION CONTROL, AND WILL BE RESPONSIBLE FOR ALL MAINTENANCE UNTIL THE FINAL ACCEPTANCE OF THE PERMANENT CONTROL MEASURES BY BCDC-WWS. THE CONTRACTOR/DEVELOPER IS REQUIRED BY BCDC-WWS TO PREPARE AND SUBMIT A SOIL EROSION AND SEDIMENTATION CONTROL PLAN IN ORDER TO OBTAIN THE SOIL EROSION AND SEDIMENTATION CONTROL PERMIT AND TO PAY ANY APPLICATION FEES AND BOND FEES NECESSARY TO OBTAIN THE PERMIT. NOTE: SOIL EROSION AND CONSTRUCTION PERMITS AND REVIEWS ARE SEPARATE ITEMS AT BCDC-WWS.

9. STATE CONSTRUCTIONS PERMITS
THE CONSTRUCTION OF PUBLIC SANITARY SEWERS OR PRESSURE PIPES SHALL NOT BEGIN UNTIL THE REQUIRED STATE CONSTRUCTION PERMITS HAVE BEEN OBTAINED. NOTE: SOIL EROSION APPROVAL AND CONSTRUCTION APPROVAL ARE SEPARATE ITEMS AT BCDC-WWS.

10. ROADWAY PERMITS
A PERMIT FROM EITHER THE AGENCY HAVING AUTHORITY OVER THE ROADWAYS IS REQUIRED FOR ALL CONSTRUCTION WITHIN ANY ROAD RIGHT-OF-WAY. IT IS THE CONTRACTOR'S RESPONSIBILITY TO SECURE ALL NECESSARY PERMITS, POST ALL NECESSARY BONDS, PAY ALL FEES, AND OBTAIN ANY REQUIRED INSURANCES.

11. CONSTRUCTION OBSERVATION
ALL CONSTRUCTION SHALL BE PERFORMED UNDER THE OBSERVATION OF A CONSTRUCTION OBSERVER FROM BCDC-WWS OR LOCAL MUNICIPALITY HAVING JURISDICTION. IT IS THE CONTRACTOR'S RESPONSIBLITILTY TO NOTIFY THE OBSERVING AGENCIES (3) WORKING DAYS PRIOR TO STARTING CONSTRUCTION TO ARRANGE FOR ON-SITE OBSERVATION AND TESTING. BCDC-WWS OR THE LOCAL MUNICIPALITY HAVING JURISDICTION SHALL BE NOTIFIED FOR A FINAL INSPECTION.

12. CONTRACTOR'S MINIMUM WAGE & USE OF IN-COUNTY LABOR
THE CONTRACTOR SHALL EMPLOY COMPETENT AND SKILLED WORKERS THROUGHOUT THE COURSE OF THE PROJECT. THE CONTRACTOR SHALL STRIVE TO USE GENESEE COUNTY RESIDENTS WHEN FEASIBLE. THE CONTRACTOR SHALL BE REQUIRED TO PAY THE PREVAILING WAGE RATES AS ESTABLISHED BY THE BUILDING AND CONSTRUCTION TRADES DEPARTMENT OF THE AMERICAN FEDERATION OF LABOR WHICH APPLIES TO THE COUNTY OF GENESEE. THESE RATES CAN BE OBTAINED BY CONTACTING THE MICHIGAN DEPARTMENT OF CONSUMER AND INDUSTRIAL SERVICES.

13. MIOSHA SAFETY REQUIREMENTS
ALL WORK, WORK PRACTICE, AND MATERIALS SHALL COMPLY WITH ALL APPLICABLE STATE AND FEDERAL SAFETY GUIDELINES, OCCUPATION, HEALTH AND ENVIRONMENTAL REGULATIONS, AND ALSO NFPA AND ANSI CODES AS APPLICABLE. ALL WORK INSIDE A CONFINED SPACE, SUCH AS MANHOLES OR OTHER UNDERGROUND STRUCTURES, SHALL BE COORDINATED WITH THE UTILITY OWNER, AND ALL WORKER SAFETY REQUIREMENTS STRICTLY ENFORCED. THE CONTRACTOR SHALL HAVE ITS SAFETY PLAN ON FILE WITH BCDC-WWS AND ONE COPY ON SITE AT ALL TIMES.

14. ROADWAY REQUIREMENTS FOR UTILITY CONSTRUCTION
THE CONTRACTOR SHALL ABIDE BY ALL THE REQUIREMENTS OF THE GCRC OR LOCAL MUNICIPALITY REGARDING THE CONSTRUCTION OF PRESSURE PIPE AND SEWER MAINS, MAINTAINING TRAFFIC, BARRICADING, BORING, BACK FILLING AND RESTORATION WITHIN ROAD RIGHT-OF-WAY.

15. OPEN CUTTING OF COUNTY/LOCAL ROADS
WHEN OPEN CUTTING OF GRAVEL OR HARD SURFACED ROADS ARE INCORPORATED INTO THE PROJECT, THE CONTRACTOR SHALL OBTAIN THE APPROVAL AND ABIDE BY ALL REQUIREMENTS OF THE AGENCY HAVING AUTHORITY OVER THE ROADWAYS, AND BY THE SPECIFICATIONS OF THE BCDC-WWS.

16. GRAVEL ROAD CONTAMINATION BY CONSTRUCTION
IF IT IS DETERMINED BY THE AGENCY HAVING AUTHORITY OVER THE ROADWAYS THAT GRAVEL ROADS HAVE BECOME CONTAMINATED DURING CONSTRUCTION THE ROAD MUST BE REPAIRED PER THE AGENCY HAVING AUTHORITY OVER THE ROADWAYS. WHERE THE EXISTING ROAD GRAVEL IS REMOVED BECAUSE OF CONSTRUCTION, ALL WORK AND MATERIALS SHALL MEET THE REQUIREMENTS AND SPECIFICATIONS OF THE AGENCY HAVING AUTHORITY OVER THE ROADWAYS.

17. RESTORATION OF GRAVEL SHOULDERS
IF IT IS DETERMINED BY THE AGENCY HAVING AUTHORITY OVER THE ROADWAYS THAT GRAVEL SHOULDERS HAVE BEEN CONTAMINATED BY CONSTRUCTION ACTIVITIES, THE CONTRACTOR SHALL RE-GRAVEL PER THE AGENCY HAVING AUTHORITY OVER THE ROADWAYS. ALL WORK AND MATERIALS SHALL MEET THE REQUIREMENTS AND SPECIFICATIONS OF THE AGENCY HAVING AUTHORITY OVER THE ROADWAYS.

18. COMPACTED GRANULAR BACKFILL FOR ROADWAYS, DRIVES, ETC.
ALL TRENCH EXCAVATION WITHIN A ONE-ON-ONE INFLUENCE OF A ROADWAY, DRIVEWAY CROSSINGS, PARKING LOTS, OR AS OTHERWISE NOTED ON THE PLANS, SHALL BE BACKFILLED WITH COMPACTED SAND MDOT CLASS II (A5) PER THE SCHEDULE OF BACKFILLING, FOUND IN THE SPECIFICATIONS. IN ADDITION, SEE THE SPECIFICATIONS FOR THE REQUIREMENTS FOR COMPACTION IN THESE AREAS. THIS STANDARD ALSO INCLUDES SERVICE LEADS UNLESS BORED.

19. SURFACE RESTORATION
ALL DISTURBED AREAS SHALL BE COMPLETELY RESTORED IN STRICT COMPLIANCE WITH THE SOIL EROSION AND SEDIMENTATION SPECIFICATIONS AND TO THE SATISFACTION OF BCDC-WWS, BCDC-SWM, GCRC, MDOT, AND THE LOCAL MUNICIPALITY. ALL COSTS FOR THE CLEANUP, RESTORATION WORK, AND OTHER INTERMEDIATE OPERATIONS SUCH AS, BUT NOT LIMITED TO, CONSTRUCTION SIGNAGE, STREET SWEEPING, AND MAINTAINING EXISTING UTILITIES, SHALL BE CONSIDERED INCLUSIVE AND AT NO ADDITIONAL COST TO THE OWNER. AREAS DISTURBED DURING CONSTRUCTION SHALL RECEIVE A 4" APPLICATION OF SCREENED TOPSOIL, FERTILIZED AND SEEDED. ALL EXCESS MATERIALS, DEBRIS, AND SIMILAR ITEMS SHALL BE REMOVED FROM THE PROJECT AREA BY THE CONTRACTOR AND DISPOSED OF PROPERLY. ALL GROUND SURFACES SHALL BE RESTORED TO ORIGINAL CONDITION OR BETTER PRIOR TO FINAL APPROVAL.

20. TRAFFIC CONTROL
THE CONTRACTOR SHALL EXECUTE THE WORK IN A MANNER SUCH THAT TRAFFIC IS MAINTAINED AND ACCESS IS PROVIDED TO ALL RESIDENCES, BUSINESSES, AND COMMERCIAL ESTABLISHMENTS. TRAFFIC SHALL BE MAINTAINED IN ACCORDANCE WITH THE TRAFFIC CONTROL PLANS AND THE LATEST EDITION OF THEMICHIGAN MANUAL OF UNIFORM TRAFFIC CONTROL DEVICES, PART 6 AND THE REQUIREMENTS OF THE AGENCY HAVING AUTHORITY OVER THE ROADWAYS OR AS DIRECTED BY THE ENGINEER.

21. SIGNING AND BARRICADING
SIGNING AND BARRICADING SHALL BE PROVIDED BY THE CONTRACTOR IN ACCORDANCE WITH THE DETAILS ON THE PLANS, THE LATEST EDITION OF THMICHIGAN MANUAL OF UNIFORM TRAFFIC CONTROL DEVICES, PART 6 AND THE REQUIREMENTS OF THE AGENCY HAVING AUTHORITY OVER THE ROADWAYS. SIGNS AND BARRICADES LEFT IN PLACE AFTER DARK SHALL BE LIGHTED.

22. PROTECTION OF HAZARDOUS AREAS
EXCAVATION AND HAZARDOUS AREAS SHALL BE PROTECTED BY BARRICADES, SNOW FENCE, OR OTHER APPROPRIATE MEANS. BARRICADES LEFT IN PLACE AFTER DARK SHALL BE LIGHTED.

23. STORM WATER DRAINAGE DURING CONSTRUCTION
THE CONTRACTOR/DEVELOPER SHALL OBTAIN THE SERVICES OF A CERTIFIED STORM WATER OPERATOR AND COMPLY WITH THE PROVISIONS OF THE NPDES AND SESC PERMITS. THE CONTRACTOR SHALL MAINTAIN DITCH DRAINAGE DURING CONSTRUCTION AND SHALL NOT OBSTRUCT SUMP PUMP LEADS DISCHARGING INTO THE DITCH. THE CONTRACTOR SHALL TAKE ALL NECESSARY MEASURES TO PROTECT ALL STORM SEWER FACILITIES, SUCH AS CATCH BASINS AND CULVERTS, DURING CONSTRUCTION. CULVERTS AND CATCH BASINS CONTAMINATED DURING CONSTRUCTION SHALL BE CLEANED.
□

24. UTILITY INFORMATION
UTILITY INFORMATION IS DELINEATED IN ACCORDANCE WITH THE LOCATIONS PROVIDED BY UTILITY OWNERS. THE DESIGN ENGINEER IS NOT RESPONSIBLE FOR THE ACCURACY OF THE INFORMATION OR THE LOCATION AT WHICH THESE SERVICES EXIST. DIFFERING FIELD CONDITIONS SHALL BE BROUGHT TO THE ATTENTION OF THE ENGINEER.

25. EXISTING UTILITIES
THE CONTRACTOR SHALL MAINTAIN ALL EXISTING SANITARY SEWER, PRESSURE PIPE, OR STORM SEWER CONNECTIONS IN SERVICE THROUGHOUT THE CONSTRUCTION PERIOD. THE CONTRACTOR SHALL PROVIDE OR ARRANGE FOR THE TEMPORARY SUPPORT OF GAS MAIN, TELEPHONE, FIBER OPTIC, CABLE, PRESSURE PIPE, SANITARY SEWER, STORM SEWER, AND UTILITY POLES WHERE NEEDED. ALL STORM SEWERS DAMAGED OR REMOVED, OR RELOCATED BY THE CONTRACTOR, SHALL BE REPLACED WITH THE SAME SIZE AND QUALITY PIPE BY THE CONTRACTOR AT NO ADDITIONAL COST TO THE PROJECT. ALL UTILITIES UNDERMINED BY THE EXCAVATION SHALL HAVE COMPACTED SAND BACKFILL PLACED UNDER THEM, UNLESS 6AA CRUSHED LIMESTONE (A1) OR 22A GRAVEL (A2) IS SHOWN ON THE CONSTRUCTION PLANS. ALL WORK, INCLUDING THE REBORING OF SANITARY SEWER SERVICE LEADS AND WATERMAIN LEADS TO ACCOMMODATE CONSTRUCTION TO CLEAR EXISTING SERVICES, SHALL BE INCLUSIVE TO THE PROJECT.

26. SHOP DRAWINGS
PRIOR TO THE START OF CONSTRUCTION, THE CONTRACTOR SHALL FURNISH TO BCDC-WWS SHOP DRAWINGS AND/OR CATALOG CUTS FOR ALL MAJOR MATERIALS AND EQUIPMENT ITEMS PER THE STANDARD SPECIFICATIONS.

27. NON-STOPPAGE CLAUSE
THE CONTRACTOR SHALL BE REQUIRED TO COMPLETE ALL WORK IN AN EXPEDITIOUS MANNER AND SHALL NOT STOP CONSTRUCTION FOR EXTENDED PERIODS ONCE CONSTRUCTION HAS BEGUN WITHOUT APPROVAL OF BCDC-WWS.

28. DISPOSAL OF EXCESS EXCAVATED MATERIAL
ALL EXCESS EXCAVATED MATERIALS SHALL BE DISPOSED OF BY THE CONTRACTOR, WITH ALL PERMITS, PERMISSIONS, AND LOCATIONS PROVIDED BY THE CONTRACTOR. ADJACENT PROPERTY OWNERS SHALL BE GIVEN PREFERENCE FOR DISPOSAL SITES. WRITTEN PERMISSION FOR DISPOSAL ON ADJACENT PROPERTY OWNERS SHALL BE PROVIDED TO BCDC-WWS.

29. CONSTRUCTION STAKING
CONSTRUCTION STAKING SHALL BE PROVIDED BY A PROFESSIONAL SURVEYOR LICENSED IN THE STATE OF MICHIGAN, HIRED AND PAID FOR BY THE CONTRACTOR, AND APPROVED BY BCDC-WWS.

30. FINAL ELEVATIONS OF SURFACE UTILITIES
ALL FINAL ELEVATIONS OF MANHOLE CASTINGS, HYDRANTS, VALVES, AND VALVE BOXES SHALL BE APPROVED BY THE BCDC-WWS REPRESENTATIVE IN THE FIELD. ANY ADJUSTMENTS THAT ARE MADE ARE AT NO ADDITIONAL COST TO THE OWNER.

31. AS-BUILT INFORMATION
UPON COMPLETION OF CONSTRUCTION, AND PRIOR TO FINAL APPROVAL FROM BCDC-WWS, THE DEVELOPER SHALL FURNISH BCDC-WWS WITH ONE COMPLETE SET OF 'AS-BUILT' DRAWINGS ON MYLAR. THESE 'AS-BUILTS' SHALL BE DERIVED FROM THE INFORMATION COLLECTED BY THE BCDC-WWS OR MUNICIPAL CONSTRUCTION OBSERVER.

32. 2-YEAR MAINTENANCE BOND
UPON COMPLETION OF CONSTRUCTION AND PRIOR TO FINAL APPROVAL, THE CONTRACTOR SHALL FURNISH THE BCDC-WWS WITH A 2-YEAR MAINTENANCE AND GUARANTEE BOND.

33. SOIL EROSION AND SEDIMENTATION CONTROL RELEASE
PRIOR TO FINAL ACCEPTANCE BY BCDC-WWS, THE CONTRACTOR SHALL REQUEST A FINAL INSPECTION OF ALL SOIL EROSION AND SEDIMENTATION CONTROL MEASURES AND RECEIVE WRITTEN APPROVAL FROM BCDC-WWS. THE SOIL EROSION AND SEDIMENTATION CONTROL BOND WILL BE RELEASED UPON BCDC-WWS FINAL APPROVAL.

34. ORDER OF PRECEDENCE
IN RESOLVING INCONSISTENCIES AMONG TWO OR MORE SECTIONS OF THE CONTRACT DOCUMENTS, PRECEDENCE SHALL BE GIVEN IN THE FOLLOWING ORDER FROM (A) THROUGH (G):
A. AGREEMENT, AND ANY ADDENDA OR CONTRACT MODIFICATIONS (WITH BCDC-WWS)
B. BID (WITH BCDC-WWS)
C. BCDC-WWS SUPPLEMENTARY CONDITIONS
D. BCDC-WWS INSTRUCTION TO BIDDERS
E. GENERAL CONDITIONS OF THE CONTRACT (WITH BCDC-WWS)
F. BCDC-WWS SPECIFICATIONS, LATEST EDITION
G. DRAWINGS

SANITARY CONSTRUCTION NOTES

1. ALL MATERIAL AND CONSTRUCTION PROCEDURES SHALL COMPLY WITH THE LATEST BCDC-WWS SPECIFICATIONS AND STANDARD DETAILS.

2. NO CONNECTION TO AN EXISTING SANITARY SEWER SHALL BE MADE WITHOUT THE PRIOR APPROVAL OF BCDC-WWS. BCDC-WWS SHALL HAVE FINAL INSPECTION AUTHORITY AND APPROVAL FOR UNDERGROUND SANITARY SEWER FACILITIES.

3. THE MATERIAL FOR THE SANITARY SEWER SHALL BE SPECIFIED ON THE CONSTRUCTION DRAWINGS. THE FOLLOWING MATERIALS ARE ACCEPTABLE TO BCDC-WWS:
A. 8" TO 15". PVC WITH A MINIMUM SDR OF 26 CONFORMING TO ASTM D-3034-00 GASKETED SEWER PIPE.
B. LARGER THAN 15". REINFORCED CONCRETE PIPE CONFORMING TO ASTM C-76-03. JOINTS SHALL BE MODIFIED TONGUE & GROOVE TYPE WITH RUBBER GASKETS CONFORMING TO ASTM C-443-02. MINIMUM SIZE SHALL BE CLASS III, WALL B.

4. ALL SANITARY SEWER SERVICE RISERS SHALL BE 6" INTERNAL DIAMETER SDR-26 PVC OR LOWER CONFORMING TO ASTM D-3034-00. JOINTS SHALL BE RUBBER GASKET JOINTS OR SOLVENT WELD BELL JOINTS. ALL SERVICE RISERS SHALL BE MARKED WITH A 5/8" REROD AT THEIR TERMINUS BURIED 1' BELOW THE SURFACE. THE RISERS SHALL BE LEFT AT 8-10' DEEP AT THE PROPERTY LINE OR EASEMENT LINE, OR AS DEEP TO SERVICE BASEMENTS. WEEP TILE, PERIMETER DRAINS, DOWN SPOUTS, OR ANY OTHER SOURCE OF WATER, SHALL NOT BE CONNECTED TO THE SANITARY SEWER.

5. PRECAST CONCRETE MANHOLES SHALL CONFORM TO ASTM C-478-03 WITH RUBBER JOINTS CONFORMING TO ASTM C-443-02. ALL FINAL ELEVATIONS OF MANHOLE CASTINGS SHALL BE DETERMINED BY THE BCDC-WWS REPRESENTATIVE. MANHOLE FRAME AND COVERS SHALL BE BOLT-DOWN, WATERTIGHT EAST JORDAN 1040 ZPT, NEENAH FOUNDRY COMPANY R-1916F, OR BCDC-WWS APPROVED ALTERNATE. STEPS SHALL BE M.A. INDUSTRIES PS-1-PF, AMERICAN STEP CO. ML-10, OR BCDC-WWS APPROVED ALTERNATE.

6. ALL SANITARY SEWERS SHALL BE INSTALLED PURSUANT TO THE SANITARY SEWER STANDARD DETAILS. DEEPER SEWERS, EXCESSIVE TRENCH WIDTH, AND WHERE NOTED, THE CONTRACTOR SHALL ADHERE TO THE REQUIREMENTS SPECIFIED.

7. WHERE MANHOLE ADJUSTMENT IS REQUIRED, THE MAXIMUM AMOUNT OF ADJUSTMENT BETWEEN THE CASTING AND THE CONE SHALL BE 9". A MAXIMUM OF TWO ADJUSTMENT RINGS ARE ALLOWED. ONLY 3" OR LARGER CONCRETE ADJUSTMENT RINGS SHALL BE USED. THE MANHOLE SHALL BE WRAPPED PER SD-5 OF THE SANITARY SEWER DETAILS.

8. ALL SANITARY SEWERS THROUGH 21" DIAMETER SHALL UNDERGO A LOW PRESSURE AIR TEST AND AN INFILTRATION TEST, IN CONFORMANCE WITH ASTM C-924-02 OR C-969-02, PRIOR TO FINAL ACCEPTANCE. SANITARY SEWER SYSTEMS LARGER THAN 21" SHALL UNDERGO AN INFILTRATION TEST. THE MAXIMUM ALLOWABLE INFILTRATION FOR PVC SYSTEMS SHALL BE 0 GALLONS PER INCH DIAMETER, PER MILE, PER 24 HOURS AND CONCRETE SYSTEMS SHALL BE 100 GALLONS PER INCH DIAMETER, PER MILE.

9. ALL PUBLIC SANITARY SEWERS 8" OR LARGER SHALL BE INTERNALLY TELEVISED BY THE CONTRACTOR. THE TV REPORT, INCLUDING THE TAPES, SHALL BE GIVEN TO BCDC-WWS PRIOR TO A REQUEST FOR FINAL INSPECTION. THE CONTRACTOR SHALL BE RESPONSIBLE FOR CLEANING (JETTING) THE LINE AND ASSURING ALL DIRT AND DEBRIS HAS BEEN REMOVED PRIOR TO TELEVISING. PRIOR TO TELEVISING THE LINE WATER SHALL BE PLACED IN THE MAIN FROM THE UPSTREAM MANHOLE UNTIL IT COMES OUT OF THE DOWNSTREAM MANHOLE. THE TV REPORT SHALL LIST THE DISTANCE A HOUSE LEAD IS LOCATED FROM A MANHOLE, ALL SHEAR BREAKS IN THE MAIN OR SERVICE LEADS, ALL LONGITUDINAL CRACKS, BROKEN PIPE, DIPS, OR HIGH POINTS IN THE LINE, ETC. THE CONTRACTOR SHALL REPAIR DAMAGED PIPE BY EXCAVATING THE PIPE AND REPLACING THE LENGTH OF PIPE IN AN APPROVED METHOD. LEAKING JOINTS SHALL BE REPAIRED BY GROUTING. A LEAKING JOINT IS DEFINED AS HAVING SUFFICIENT INFILTRATION TO WET THE INTERIOR OF THE JOINT. BCDC-WWS SHALL BE NOTIFIED WHEN THE LINE IS TO BE TELEVISED AND SHALL BE PRESENT TO INSPECT REPAIRS.

10. SANITARY MANHOLES SHALL BE PLACED AT PROPERTY LINES WHEN FEASIBLE.

11. PRIOR TO PERFORMING ANY TESTING OR FINAL INSPECTION, THE CONTRACTOR SHALL BE REQUIRED TO PROVIDE THE FOLLOWING ITEMS:
A. THE RESULTS OF A PRELIMINARY TEST ON THE SYSTEM.
B. PROVIDE RESULTS OF DENSITY CHECKS ON COMPACTED SAND BACKFILL FROM A CERTIFIED TESTING AGENCY.
C. FURNISH A COMPLETED TWO-YEAR MAINTENANCE & GUARANTEE BOND.
D. PROVIDE MATERIAL CERTIFICATES.
E. COMPLETE FINAL ADJUSTMENTS ON SANITARY SEWER STRUCTURES.
G. THE DEVELOPER SHALL PROVIDE AS-BUILTS TO BCDC-WWS.

12. THE FINAL TESTING SHALL CONSIST OF VISUAL INSPECTION OF MANHOLES, TELEVISING OF SANITARY MAIN, VACUUM TEST IN THE MANHOLES, LOW AIR PRESSURE TEST AND/OR INFILTRATION TEST DEPENDENT ON THE SIZE OF THE SANITARY MAIN (SEE #8 ABOVE), AND PASSING AN APPROPRIATE SIZED MANDRELL 30 DAYS AFTER THE MAIN HAS BE INSTALLED.

13. PRIOR TO ISSUING FINAL APPROVAL, BCDC-WWS SHALL INSPECT THE FINAL GRADE OF THE PROJECT TO ENSURE THAT NO FURTHER ADJUSTMENTS ARE NECESSARY TO ANY SANITARY SEWER STRUCTURES. IF ANY SUCH ADJUSTMENTS ARE NECESSARY, THE CONTRACTOR SHALL, AT NO ADDITIONAL COST TO THE OWNER MAKE THE REQUIRED CHANGES. FINAL APPROVAL SHALL NOT BE GRANTED UNTIL ALL NECESSARY ADJUSTMENTS HAVE BEEN MADE.

PRESSURE PIPE CONSTRUCTION NOTES

1. ALL MATERIAL AND CONSTRUCTION PROCEDURES SHALL COMPLY WITH THE LATEST BCDC-WWS SPECIFICATIONS AND STANDARD DETAILS.

2. ALL PUBLIC PRESSURE PIPE SHALL BE DUCTILE IRON. PRESSURE PIPES 10" AND SMALLER SHALL BE DUCTILE IRON CLASS 53 AS A MINIMUM. PRESSURE PIPES 12" AND LARGER SHALL BE DUCTICLE IRON CLASS 54 AS A MINIMUM. THE PIPE SHALL BE BELL AND SPIGOT, OR RESTRAINED JOINT FITTINGS, FITTED WITH A RUBBER GASKET. FITTINGS MAY BE GRAY IRON OR DUCTILE IRON MEETING CLASS 350 PSI RATING. IN CASES OF 3" SANITARY SEWER FORCEMAIN, SDR-21 PVC MAY BE UTILIZED.

3. ALL PIPES, VALVES, AND FITTINGS SHALL BE POLYWRAPPED, EXCEPT IN MANHOLES. CIRCUMFERENTIAL WRAPS OF MANUFACTURER RECOMMENDED TAPE SHALL BE PLACED AT NO GREATER THAN 4' INTERVALS ALONG THE BARREL OF THE PIPE, WITH THE EXCESS FOLDED OVER THE TOP TO TAKE OUT EXCESS SLACK, HELPING TO MINIMIZE THE SPACE BETWEEN THE POLYETHYLENE AND THE PIPE. COMPLETE THE INSTALLATION BY OVERLAPPING THE POLYETHYLENE TUBE WRAP AT EACH END AND SEAL ENDS PER AWWA C105/A21.5-99.

4. WHERE SANITARY SERVICE LEADS OR OTHER UTILITIES ARE ENCOUNTERED, THE CONTRACTOR SHALL MAKE ADJUSTMENTS TO PROVIDE CONTINUOUS SERVICE TO PROPERTIES ALONG THE ROUTE OF CONSTRUCTION. ALL WORK, INCLUDING THE REBORING OF SANITARY SEWER SERVICE LEADS TO ACCOMMODATE CONSTRUCTION, OR ADJUSTING PRESSURE PIPE INSTALLATION TO CLEAR EXISTING SERVICES, SHALL BE INCLUSIVE TO CONSTRUCTION.

5. ALL PRESSURE PIPES SHALL HAVE A MINIMUM COVER OVER THE TOP OF THE PIPE OF 5' FROM FINISHED GRADE, 5' CLEARANCE UNDER DRAINS, 5' CLEARANCE BELOW EXISTING DITCHES, AND/OR A MINIMUM 5' BELOW THE EXISTING ROAD. THE STANDARD LAYING CONDITIONS FOR WATERMAIN SHALL BE A 30" TRENCH WIDTH, OR PIPE DIAMETER PLUS 12". THE PIPE SHALL BE LAID ON A 4" MDOT CLASS II SAND (A5), WITH RECESSES TO ACCOMMODATE PIPE BELLS OR AS SHOWN ON PLANS.

6. ALL TRENCH EXCAVATION, UNDER OR WITHIN 5' OF EXISTING OR PROPOSED PAVING, SHALL BE BACK FILLED WITH COMPACTED MDOT CLASS II SAND (A5).

7. THE CONTRACTOR SHALL RESTRAIN ALL THRUST IN THE SYSTEM BY THE USE OF BCDC-WWS APPROVED RESTRAINED JOINTS. DURING THE CONSTRUCTION OF WATERMAINS ALL HYDRANTS, TEES, VERTICAL OR HORIZONTAL BENDS AND FUTURE VALVE CONNECTIONS SHALL BE RESTRAINED. THE RESTRAINT SYSTEM AND LOCATION IN THE FIELD SHALL BE DESIGNATED ON THE PLANS.

8. THE CONTRACTOR SHALL ENCASE THE PRESSURE PIPE IN CONCRETE WHERE VERTICAL SEPARATION BETWEEN THE SANITARY SEWER OR STORM SEWER AND THE WATERMAIN IS LESS THAN 18" INCHES.

9. GATE VALVES SHALL BE RESILIENT SEATED CONFORMING TO AWWA C509-01 OR C515-01. ALL VALVES IN PAVED AREAS SHALL BE PLACED IN A CONCRETE MANHOLE STRUCTURE SIZED PER BCDC-WWS PRESSURE PIPE DETAIL SD-8. VALVES SHALL HAVE A VERTICAL, NON-RISING STEM, AND OPEN CLOCKWISE, OR AS SPECIFIED BY LOCAL MUNICIPALITY HAVING JURISDICTION.

10. FIRE HYDRANTS SHALL CONFORM TO AWWA C502-94. ALL HYDRANTS SHALL BE TRAFFIC MODELS WITH BREAKAWAY FLANGES, AND SHALL HAVE THE DRAIN HOLES FACTORY PLUGGED. ALL THE FIRE HYDRANT ASSEMBLIES FROM THE TEE THROUGH THE HYDRANT, SHALL BE RESTRAINED BY A BCDC-WWS APPROVED METHOD. FIRE HYDRANTS SHALL BE PLACED AT PROPERTY LINES AND SHALL BE PAINTED YELLOW WITH THE CAP COLOR CODED IN ACCORDANCE WITH THE STANDARD DETAIL. FINAL ELEVATIONS AND ADJUSTMENTS TO GRADE, USING EXTENSION PIECES IF REQUIRED, SHALL BE ACCOMPLISHED BY THE CONTRACTOR AT NO EXTRA COST TO THE PROJECT. HYDRANTS SHALL HAVE A 5" VALVE OPENING. FIRE HYDRANTS SHALL BE EAST JORDAN 5 BR, WATEROUS WB67-250, OR BCDC-WWS APPROVED ALTERNATE.

11. PRESSURE TAPS TO EXISTING WATERMAINS, AND CONNECTIONS TO EXISTING VALVES, SHALL BE MADE ONLY UNDER BCDC-WWS OR LOCAL JURISDICTION INSPECTION. ALL VALVES OPENING AND CLOSING SHALL BE BY THE OPERATIONAL AUTHORITY. (ONLY A BCDC-WWS APPROVED TAPPING SLEEVE IS ALLOWED FOR ALL PRESSURE TAPS.) A CONCRETE MANHOLE SHALL BE REQUIRED AROUND ALL PRESSURE TAPS.

12. THE CONTRACTOR SHALL HAVE THE OPTION OF PRESSURE TESTING THE WATERMAIN AGAINST THE EXISTING VALVE AT THE POINT OF BEGINNING OF THE PROJECT. IF THE EXISTING VALVE LEAKS, THE CONTRACTOR SHALL MAKE REPAIRS AND REPEAT THE PRESSURE TEST AGAINST THE EXISTING VALVE, AT NO COST TO THE OWNER.

13. WATERMAINS SHALL BE TESTED IN ACCORDANCE WITH AWWA C600-99, AND CHLORINATED IN ACCORDANCE WITH THE LATEST GENESEE COUNTY STANDARD SPECIFICATIONS. WATERMAINS SHALL BE TESTED TO 150 PSI AS MEASURED AT THE HIGH POINT IN THE WATER LINE. WATERMAIN CHLORINATION SHALL BE OBSERVED AND MONITORED BY BCDC-WWS OR THE LOCAL MUNICIPALITY HAVING JURISDICTION. CHLORINATION AND TESTING SHALL BE AT THE CONTRACTOR'S EXPENSE. A CERTIFICATE OF APPROVAL FROM THE AGENCY HAVING AUTHORITY SHALL BE ISSUED PRIOR TO THE WATER BEING USED FOR HUMAN CONSUMPTION.

14. WHEN SPECIFIED BY THE CONSTRUCTION DOCUMENTS, THE CONTRACTOR SHALL SUPPLY ALL WATER SERVICE LEADS. THESE LEADS SHALL BE "K" COPPER AND SHALL BE A MINIMUM OF 3/4" IN DIAMETER AND INSTALLED IN ACCORDANCE WITH THE WATERMAIN STANDARD DETAIL. ALL SERVICE LEADS SHALL BE MARKED WITH A 2" X 2" WOOD STAKE BURIED 1' BELOW THE SURFACE ALONG WITH WITNESS POINTS SUPPLIED TO THE OWNER. CORPORATIONS SHALL BE BRASS.

15. THE CONTRACTOR SHALL INSTALL, AS A MINIMUM, 1" CORPORATIONS ON THE PRESSURE PIPE FOR PRESSURE TESTING, CHLORINE ADDITION, AND FOR BLOW-OFF PURPOSES. THE CORPORATIONS SHALL HAVE COPPER PIPE EXTENDING TO THE GROUND SURFACE. THE CONTRACTOR SHALL REMOVE THE CORPORATION AND COPPER LINE UPON A SATISFACTORY TEST, AND INSTALL A BRASS PLUG, PRIOR TO FINAL ACCEPTANCE.

16. PRIOR TO REQUESTING ANY FINAL PRESSURE TESTING, AND GATHERING THE REQUIRED BACTERIA SAMPLES (FOR WATERMAINS ONLY), THE CONTRACTOR SHALL BE REQUIRED TO PERFORM THE FOLLOWING ITEMS:
A. CONDUCT A PRELIMINARY PRESSURE TEST ON THE SYSTEM
B. PROVIDE RESULTS OF DENSITY CHECKS ON COMPACTED SAND BACKFILL FROM A CERTIFIED TESTING AGENCY.
C. FURNISH A COMPLETED TWO-YEAR MAINTENANCE & GUARANTEE BOND.
D. PROVIDE MATERIAL CERTIFICATES.
E. COMPLETE FINAL ADJUSTMENTS OF FIRE HYDRANT (FOR WATERMAINS ONLY), VALVES, AND MANHOLES.
F. PROPER CAP COLOR OF FIRE HYDRANTS (FOR WATERMAINS ONLY).
G. THE DEVELOPER SHALL PROVIDE AS-BUILTS TO BCDC-WWS.

17. PRIOR TO ISSUING FINAL APPROVAL, BCDC-WWS SHALL INSPECT THE FINAL GRADE OF THE PROJECT TO ENSURE THAT NO FURTHER ADJUSTMENTS ARE NECESSARY TO ANY PRESSURE PIPE STRUCTURES. IF ANY SUCH ADJUSTMENTS ARE NECESSARY, THE CONTRACTOR SHALL, AT NO ADDITIONAL COST TO THE OWNER MAKE THE REQUIRED CHANGES. FINAL APPROVAL SHALL NOT BE GRANTED UNTIL ALL NECESSARY ADJUSTMENTS HAVE BEEN MADE.

CONSTRUCTION NOTES

REVISIONS

CREEKWOOD ARCHITECTURE, INC.
1111 s. creekwood burton, michigan 48509
tel. (810) 742-0480 fax (810) 742-8393

SHEET TITLE: NOTES

PROJECT: NEW OFFICE BUILDING for WALKER JUNE CALHOUN CPA's
CREEKWOOD TRAIL BURTON, MI.

DRAWN BY B.A.C. CHECKED BY R.A.S.

JOB NO. 150001-OF
DATE 12 OCT 2015
SHEET NO. S8 OF 8

Attachment: 16-07 (2118 : SPR #16-07)

HYDRO-SEEDING SPECIFICATIONS:

1) THE CONTRACTOR SHALL REMOVE ALL WEEDS, STONES OVER 1" IN DIAMETER, ROOTS, BRUSH, STAKES, BUILDING MATERIAL AND OTHER DEBRIS.

2) AREAS INDICATED "TURF" SHALL BE HYDRO-SEEDED WITH A PUMP RATED AND OPERATED AT NO LESS THAN 100 GPM AND NO LESS THAN 100 PSI, WITH A MECHANICAL AGITATOR THAT WILL ENSURE UNIFORM SUSPENSION OF SEED AND FERTILIZER IN WATER. EACH 1000 GALLONS OF SLURRY MIX SHALL CONTAIN 1500 lbs. OF APPROVED CELLULOSE FIBER, 200 lbs. OF THE SPECIFIED SEED MIXTURE AND 500 lbs. OF AN APPROVED 12/12/12 COMMERCIAL FERTILIZER.

   APPLY SEED AND FERTILIZER AT A RATE OF NOT LESS THAN 1000 GALLONS OF SLURRY PER ACRE.

3) FINISH GRADING – AFTER CLEAN UP AND PRIOR TO TOP SOILING, THE CONTRACTOR SHALL FINE GRADE WITH MECHANICAL EQUIPMENT AND HAND RAKING IF REQUIRED TO BRING ALL AREAS TO THE DESIGN GRADES INDICATED O THE SITE PLAN AND NECESSARY TO MAINTAIN POSITIVE DRAINING.

4) TOPSOIL SHALL BE UNIFORMLY SPREAD TO SUPPORT SEED GERMINATION AND PROCEDURE TURF. TOPSOIL SAMPLE MAY BE REQUIRED BY THE LANDSCAPE ARCHITECT AND THE SOURCE DESIGNATION BY THE CONTRACTOR.

5) SEED MIXTURE
   A. 40% KENTUCKY BLUETURF
   B. 50% "PENNLAWN" RED FESCUE
   C. 50% "PENNFINE" PERENNIAL RYGRASS

6) SEED AND FERTILIZER SHALL BE DELIVERED TO THE SITE IN THE MANUFACTURER'S ORIGINAL SEALED CONTAINERS, STATING MIXTURE COMPONENTS AND PERCENTAGES. SEED AND FERTILIZER OTHERWISE DELIVERED WILL NOT BE ACCEPTED.

7) MATERING
   THE CONTRACTOR HAS THE RESPONSIBILITY OF IRRIGATING THE SEED BED.

8) GUARANTEE
   THE CONTRACTOR SHALL OVERSEED ALL AREAS THAT HAVE BARE SPOTS IN EXCESS OF ONE SQ. FT. IN SIZE.

9) INSPECTION
   THE LANDSCAPE ARCHITECT SHALL BE THE OWNER'S AGENT FOR THIS WORK AND WILL DETERMINE COMPLETION AND ACCEPTANCE OF WORK PERFORMED, AND WILL MAKE CASUAL INSPECTION DURING SEEDING OPERATIONS. PROMPT CLEANUP OF THE SITE UPON COMPLETION WILL BE REQUIRED. WALKS AND DRIVES SHALL BE KEPT CLEAN AND PASSABLE.

GENERAL NOTES

ALL LANDSCAPE AREAS ADJACENT TO DRIVES OR PARKING AREAS ARE TO BE CURBED WITH A MINIMUM 6" CONCRETE CURBING.

ALL PLANTING BEDS ARE TO BE EDGED.

ALL LANDSCAPING IS TO BE CONTINUOUSLY MAINTAINED.

ALL SITE IMPROVEMENTS DETAILED ON THIS PLAN ARE TO BE COMPLETED PRIOR TO THE ISSUANCE OF A FINAL CERTIFICATE OF OCCUPANCY.

ALL RIGHT OF WAY AREAS ARE TO BE SEEDED OR HYDROSEEDED

ALL LANDSCAPE AREAS ARE TO BE IRRIGATED WITH AN UNDERGROUND IRRIGATION SYSTEM.

LANDSCAPE NOTES

ALL PLANT MATERIAL SHALL BE TRUE TO NAME, FREE FROM PHYSICAL DAMAGE AND WIND BURN. PLANTS SHALL BE FULL, WELL-BRANCHED, AND IN HEALTHY VIGOROUS GROWING CONDITION.

PLANTS SHALL BE WATERED BEFORE AND AFTER PLANTING IS COMPLETE.

ALL TREES MUST BE STAKED, FERTILIZED AND MULCHED AND SHALL BE GUARANTEED TO EXHIBIT A NORMAL GROWTH CYCLE FOR AT LEAST ONE (1) FULL YEAR FOLLOWING PLANTING.

ALL MATERIAL SHALL CONFORM TO THE GUIDELINES ESTABLISHED IN THE MOST RECENT EDITION OF THE AMERICAN STANDARD FOR NURSERY STOCK.

PROVIDE CLEAN BACK FILL SOIL, USING MATERIAL STOCKPILED ON SITE. SOIL SHALL BE SCREENED AND FREE OF ANY DEBRIS, FOREIGN MATERIAL, AND STONE. 'AGRIFORM' TABS OR SIMILAR SLOW-RELEASE FERTILIZER SHALL BE ADDED TO THE PLANTING PITS BEFORE BEING BACKFILLED.

ALL PLANTINGS SHALL BE MULCHED WITH SHREDDED HARDWOOD BARK. SPREAD TO A MINIMUM DEPTH OF 4". MULCH IS TO BE FREE FROM DEBRIS AND FOREIGN MATERIAL, AND SHALL CONTAIN NO PIECES OF INCONSISTENT SIZE.

THE LANDSCAPE CONTRACTOR SHALL BE RESPONSIBLE FOR ALL WORK SHOWN ON THE LANDSCAPE DRAWINGS AND SPECIFICATIONS.

NO SUBSTITUTIONS OR CHANGES OF LOCATION, OR PLANT TYPES SHALL BE MADE WITHOUT THE APPROVAL OF THE LANDSCAPE ARCHITECT. THE LANDSCAPE ARCHITECT SHALL BE NOTIFIED OF ANY DISCREPANCIES BETWEEN THE PLANS AND FIELD CONDITIONS PRIOR TO INSTALLATION.

THE LANDSCAPE CONTRACTOR SHALL BE RESPONSIBLE FOR MAINTAINING ALL PLANT MATERIAL IN A VERTICAL CONDITION THROUGHOUT THE GUARANTEED PERIOD.

THE LANDSCAPE ARCHITECT SHALL HAVE THE RIGHT, AT ANY STAGE OF THE INSTALLATION, TO REJECT ANY WORK OR MATERIAL THAT DOES NOT MEET THE REQUIREMENTS OF THE PLANS AND SPECIFICATIONS, IF REQUESTED BY OWNER.

CONTRACTOR SHALL BE RESPONSIBLE FOR CHECKING PLANT QUANTITIES TO ENSURE QUANTITIES ON DRAWINGS AND PLANT LIST ARE THE SAME. IN THE EVENT OF A DISCREPANCY, THE QUANTITIES ON THE PLANS SHALL PREVAIL.

THE LANDSCAPE CONTRACTOR SHALL SEED AND MULCH ALL AREAS DISTURBED DURING CONSTRUCTION, THROUGHOUT THE DEVELOPMENT.

A PRE-EMERGENT WEED CONTROL AGENT, "PREEN" OR EQUAL, SHALL BE APPLIED UNIFORMLY TO ALL PLANTING BEDS PRIOR TO MULCHING.

SITE CONDITIONS:

THE LANDSCAPE CONTRACTOR SHALL NOT OBSTRUCT ROADS, PARKING AREAS OR WALKS WITH MATERIALS, EQUIPMENT OR DEBRIS. THE ENTIRE PARKING AREA MUST BE AVAILABLE FOR CAPACITY USE DURING WORKING HOURS. SPECIAL ARRANGEMENTS WILL BE MADE TO ISOLATE SPECIFIC AREAS REQUIRED FOR CONSTRUCTION. THESE AREAS WILL BE REARRANGED WITH HIGH ADMINISTRATION BY THE LANDSCAPE ARCHITECT.

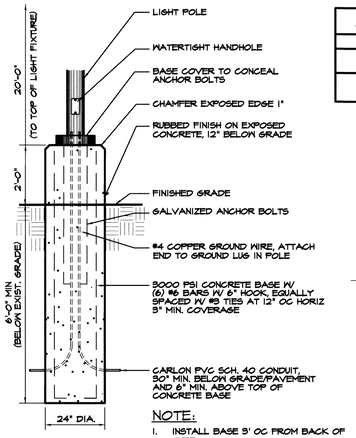

NOTE:

1. INSTALL BASE 3' OC FROM BACK OF CURB.

LIGHT POLE BASE DETAIL

NO SCALE

LUMINAIRE SCHEDULE					LED SITE LIGHTING		
SYMBOL	QTY	MODEL #	DESCRIPTION	LUMENS	LAMP	WATTS	LLF
	2	ASL-16L-5K-210-3IES	ASL SITE LIGHT	ABSOLUTE	16 HIGH BRIGHTNESS LEDS 5000K-70CRI	123.5	.95

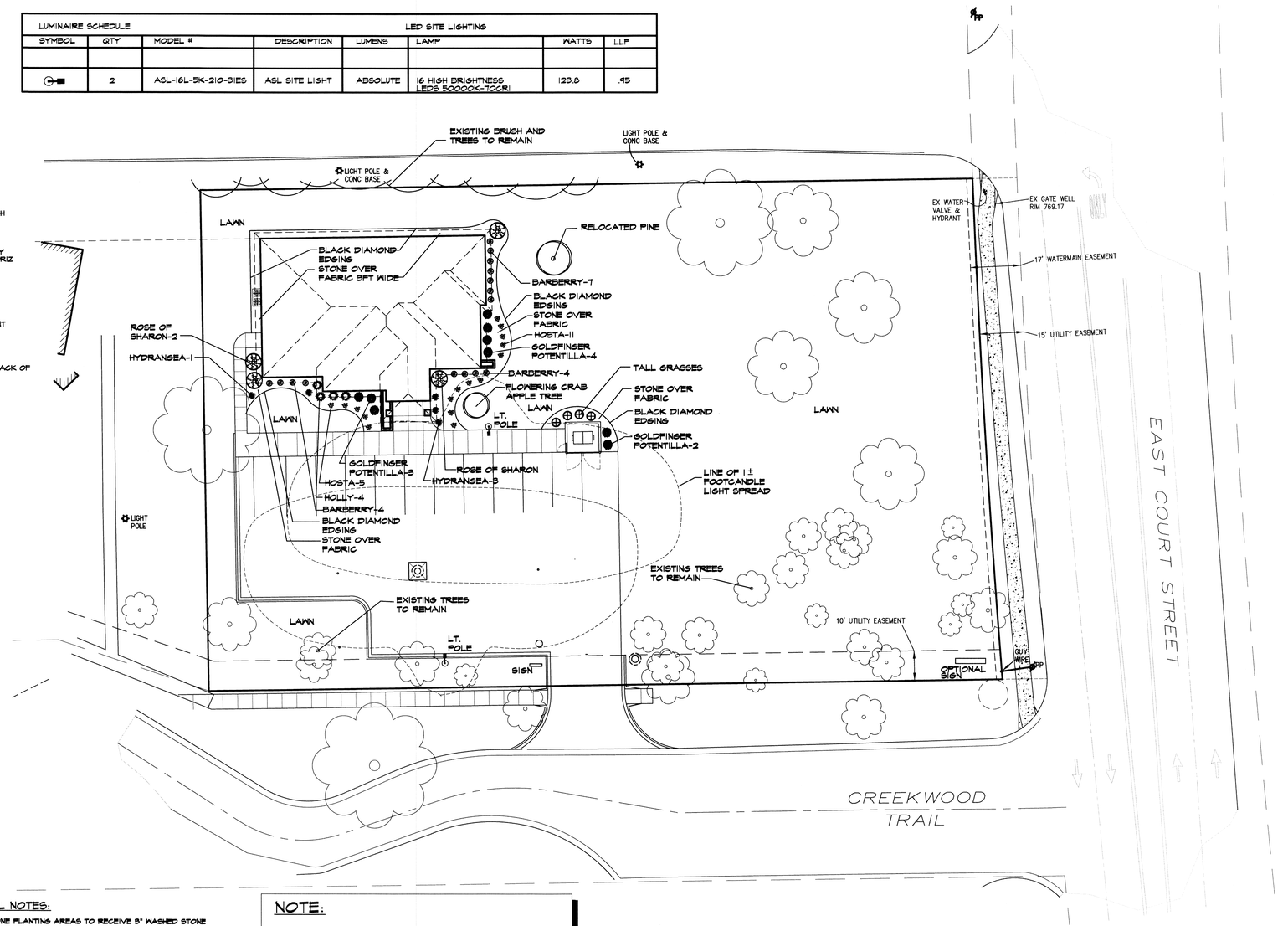

GENERAL NOTES:

1) ALL STONE PLANTING AREAS TO RECEIVE 3" WASHED STONE (2"-4" DIA.) PER PLAN OVER DE-MIT FABRIC WEED BARRIER UNDERLAYMENT.
   ALL MULCH PLANTING AREAS TO RECEIVE 3" CEDAR MULCH PER PLAN OVER DE-MIT FABRIC WEED BARRIER UNDERLAYMENT.
2) LAWN EDGING TO BE ALUMINUM OR APPROVED EQUAL.
3) GROUND COVER PLANTS TO BE PLANTED IN SOIL MIX (NO STONE AROUND)

NOTE:

ALL LAWN AND LANDSCAPED AREAS ARE TO FULLY IRRIGATED

PROVIDE SEPERATE ZONES FOR LAWN AND PLANTING BEDS

LANDSCAPING PLAN & LIGHTING PLAN

SCALE: 1"=20'-0"

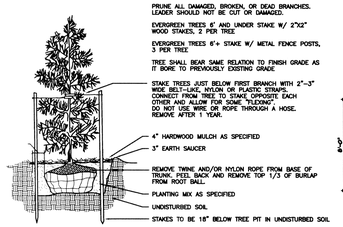

EVERGREEN TREE PLANTING - DETAIL

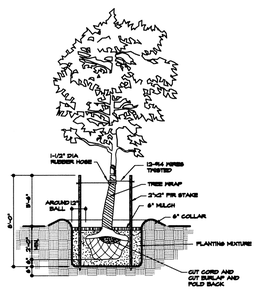

TREE PLANTING DETAIL

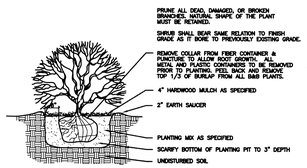

SHRUB PLANTING DETAIL

811 Know what's below. Calbefore you dig.

LANDSCAPE LEGEND

QTY.	PLANT TYPE	BOTANICAL MAME	SIZE	ROOT
1	FLOWERING CRAB	MALUS CAMZAM	2" CAL	B&B
4	ROSE OF SHARRON		48" HT.	CONT.
9	GOLDFINGER POTENTILLA	JUNIPERUS SABINA TAMARISCIFOLA	18" DIA.	CONT.
18	DWARF BURNING BUSH	EUONYMUSALATUS COMPACTUS	36" HT.	CONT.
15	BARBERRY		24" HT.	CONT.
0	STELLA D'ORO DAYLILIES	HEMEROCALLIS STELLA D'ORO	1 GAL	CONT.
16	HOSTA (RELOCATED BY OWNER)		1 GAL	CONT.
5	HYDRANGEA		1 GAL	CONT.
3	FOUNTAIN GRASS	PENNISETUM ALOPECUROIDES	2 GAL.	CONT.

CREEKWOOD ARCHITECTURE, INC.
1111 s. creekwood burton, michigan 48509
tel. (810) 742-0480 fax (810) 742-8393

REVISIONS

SHEET TITLE: LANDSCAPING PLAN & LIGHTING PLAN

PROJECT: NEW OFFICE BUILDING for WALKER JUNE CALHOUN CPA's
CREEKWOOD TRAIL BURTON, MI.

DRAWN BY B.A.C. CHECKED BY R.A.S.

JOB NO.150001-OP

DATE 12 OCT 2015

SHEET NO. L1 OF 1

Attachment: 16-07 (2118 : SPR #16-07)

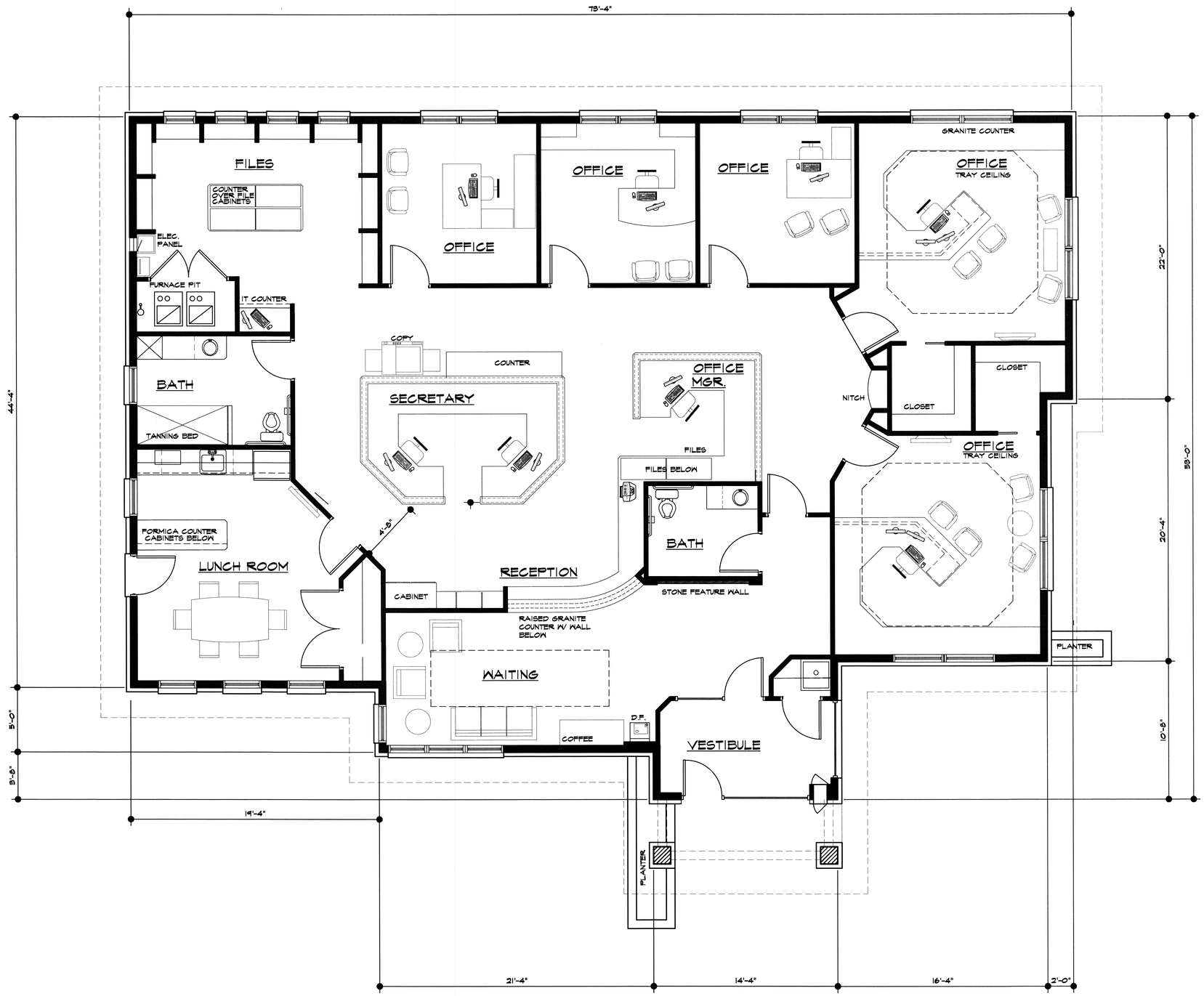

NORTH

FLOOR PLAN

SCALE: 1/4" = 1'-0"
3,484 SQ. FT.

REVISIONS

CREEKWOOD ARCHITECTURE, INC.
1111 s. creekwood burton, michigan 48509
tel. (810) 742-0480 fax (810) 742-8393

SHEET TITLE
FLOOR PLAN

PROJECT
NEW OFFICE BUILDING for
WALKER JUNE CALHOUN CPA's
CREEKWOOD TRAIL BURTON, MI.

DRAWN BY B.A.C. CHECKED BY R.A.S.

JOB NO. 150001-OFF

DATE 12 OCT 2015

SHEET NO.
A1
OF 2

Attachment: 16-07 (2118 : SPR #16-07)

Consultant Presentation

This is the time that we ask each consultant to give a maximum 5 minute presentation about their proposal, and answer any questions the Commission may have. We ask that during this time the other consultants leave the room.

Approve and Authorize the acceptance of the Master Plan proposal by Rowe Engineering and the recommendation to City Council to enter into a contract with Rowe Engineering for consultant services in the development of the City of Burton's Master Plan.

RESULT:	**CARRIED [6 TO 2]**
MOVER:	Ellen Ellenburg, Councilwoman
SECONDER:	Robert Johnson, Commissioner
AYES:	Ellenburg, Walls, Centilli, Johnson, Gorang, Walton
NAYS:	Kevin Burge, Mary Ann White
EXCUSED:	Greg Kray

SPR #16-01

By: Paula Thompson
900 E. Geneva Dr.
Dewitt, MI 48820

Re: 2458 S. Center Rd. Burton, MI 48519

For: Biggby Coffee

ATTACHMENTS:

- 16-01 (PDF)

City of Burton

Department of Public Works
4093 Manor Drive
Genesee County, Burton, Michigan 48519
(810) 742-9230

APPLICATION FOR ZONING REVIEW

DATE FILED: 1-4-16

FEE: $40.00

RECEIPT NO:

CHECK NO: 1492

SPR #: 16-01

PLEASE PRINT

DATE: 1-4-16

APPLICANTS NAME: Paula J. Thompson

APPLICANTS ADDRESS: 900 E. Geneva Dr DeWitt, MI 48820

APPLICANTS PHONE NO: 517-898-6994

PROPOSED NAME OF BUSINESS: BIGGBY Coffee #485

PROPOSED TYPE OF BUSINESS: Specialty coffee

SITE ADDRESS: 2458 S. Center Rd Burton, MI 48519

USE OF STRUCTURE: Specialty coffee

SQ FOOTAGE OF PROPERTY: 1684

SQ FOOTAGE OF STRUCTURE:

NUMBER OF EMPLOYEES/SEATS: 12/28

APPLICANTS SIGNATURE: [signature]

*** ALSO ATTACH A FLOOR PLAN OF THE EXISTING AND PROPOSED BUSINESS.

Attachment: 16-01 (2112 : SPR #16-01)

SPR #16-02

By: Daryl Simpson
3309 Associates Dr.
Burton, MI 48529

Re: 3323 Associates Dr. Burton, MI 48529

For: Medical Marijuana Grow Facility

ATTACHMENTS:

- 16-02 (PDF)

City of Burton

Department of Public Works
4093 Manor Drive
Genesee County, Burton, Michigan 48519
(810) 742-9230

APPLICATION FOR ADMINISTRATIVE SITE PLAN REVIEW

DATE FILED: 1-6-16

FEE: $75.00

RECEIPT NO:

CHECK NO: 1116

SPR #: 16-02

PLEASE PRINT

DATE: January 6th 2016

APPLICANTS NAME: Daryl Simpson

APPLICANTS ADDRESS: 3309 Associates dr

APPLICANTS PHONE NO: (810) - 875 - 5213

PROPOSED NAME OF BUSINESS: JND GROW

SITE ADDRESS: 3323 Associates dr.

SUBDIVISION & LOT # OR PARCEL NUMBER: 59-29-551-003

TYPE: ☒ CHANGE OF OWNERSHIP ☒ CONSTRUCTION LESS THAN 2%

USE OF STRUCTURE: Commercial Grow Facility

SQ FOOTAGE OF PROPERTY:

SQ FOOTAGE OF STRUCTURE: 8,000

NUMBER OF EMPLOYEES/SEATS: 2 (1 caregiver, 1 office Administration)

APPLICANTS SIGNATURE: Daryl M. Simpson

*** ALSO ATTACH A FLOOR PLAN OF THE EXISTING AND PROPOSED BUSINESS.

Attachment: 16-02 (2113 : SPR #16-02)

SPR #16-03

By: Auction Wholesale, LLC.
1096 N. Center Rd.
Burton, MI 48509

Re: 1096 N. Center Rd. Burton, MI 48509

For: Wholesale vehicles

ATTACHMENTS:

- 16-03 (PDF)

City of Burton

Department of Public Works
4093 Manor Drive
Genesee County, Burton, Michigan 48519
(810) 742-9230

APPLICATION FOR ZONING REVIEW

DATE FILED: 1-12-16

FEE: $40.00

RECEIPT NO:

CHECK NO: 8210

SPR #: 16-03

PLEASE PRINT

DATE: January 12 2016

APPLICANTS NAME: Auction Wholesale LLC Raymond Powell

APPLICANTS ADDRESS: 1096 N. Center Rd

APPLICANTS PHONE NO: 810 691 5378

PROPOSED NAME OF BUSINESS: Auction Wholesale

PROPOSED TYPE OF BUSINESS: Automobile Importer

SITE ADDRESS: 1096 N Centee Rd

USE OF STRUCTURE: Automobile ~~[illegible]~~ Importer

SQ FOOTAGE OF PROPERTY: ~~50,000~~ 5 Acres

SQ FOOTAGE OF STRUCTURE: 50,000

NUMBER OF EMPLOYEES/SEATS: 20

APPLICANTS SIGNATURE: Ry Powell

*** ALSO ATTACH A FLOOR PLAN OF THE EXISTING AND PROPOSED BUSINESS.

Attachment: 16-03 (2114 : SPR #16-03)

SPR #16-04

By: Rob Bulyovsky
1096 N. Center Rd. Suite 118
Burton, MI 48509

Re: 1096 N. Center Rd. Burton, MI 48509

For: Wholesale Vehicles

ATTACHMENTS:

- 16-04 (PDF)

City of Burton

Department of Public Works
4093 Manor Drive
Genesee County, Burton, Michigan 48519
(810) 742-9230

APPLICATION FOR ZONING REVIEW

DATE FILED: 1-21-16

FEE: $40.00

RECEIPT NO:

CHECK NO: 8212

SPR #: 16-04

PLEASE PRINT

DATE: Jan 20, 2016

APPLICANTS NAME: Rob Bulyovsky

APPLICANTS ADDRESS: 1096 N. Center Rd Suite 118

APPLICANTS PHONE NO: 519-239-9519

PROPOSED NAME OF BUSINESS: Badb Holdings USA, Inc.

PROPOSED TYPE OF BUSINESS: Automotive Wholesale

SITE ADDRESS: 1096 N. Center

USE OF STRUCTURE: Commercial

SQ FOOTAGE OF PROPERTY:

SQ FOOTAGE OF STRUCTURE: 45,000

NUMBER OF EMPLOYEES/SEATS: 1

APPLICANTS SIGNATURE:

*** ALSO ATTACH A FLOOR PLAN OF THE EXISTING AND PROPOSED BUSINESS.

Attachment: 16-04 (2115 : SPR #16-04)

SPR #16-05

By: Ben Ashley
3412 E. Bristol Rd.
Burton, MI 48529

Re: 4232 S. Dort Hwy. Burton, MI 48529

For: Medical Marijuana Grow Facility

ATTACHMENTS:

- 16-05 (PDF)

City of Burton

Department of Public Works
4093 Manor Drive
Genesee County, Burton, Michigan 48519
(810) 742-9230

APPLICATION FOR ADMINISTRATIVE SITE PLAN REVIEW

DATE FILED: 1-26-16

FEE: $75.00

RECEIPT NO: _____

CHECK NO: _____

SPR #: 16-05

PLEASE PRINT

DATE: 1-19-2016

APPLICANTS NAME: Ben Ashley

APPLICANTS ADDRESS: 3412 E. Bristol Rd - Burton 48529

APPLICANTS PHONE NO: 810 625 1757

PROPOSED NAME OF BUSINESS: BLA Investments LLC

SITE ADDRESS: 64232 S. Dort Hwy - Burton - 48529

SUBDIVISION & LOT # OR PARCEL NUMBER: _____

TYPE: [X] CHANGE OF OWNERSHIP [ ] CONSTRUCTION LESS THAN 2%

USE OF STRUCTURE: Commercial Grow - medical marijuana.

SQ FOOTAGE OF PROPERTY: _____

SQ FOOTAGE OF STRUCTURE: 4370. SQ FT

NUMBER OF EMPLOYEES/SEATS: 1.

APPLICANTS SIGNATURE: Dennis Ashley

*** ALSO ATTACH A FLOOR PLAN OF THE EXISTING AND PROPOSED BUSINESS.

Attachment: 16-05 (2116 : SPR #16-05)